TOHATSU
OUTBOARD

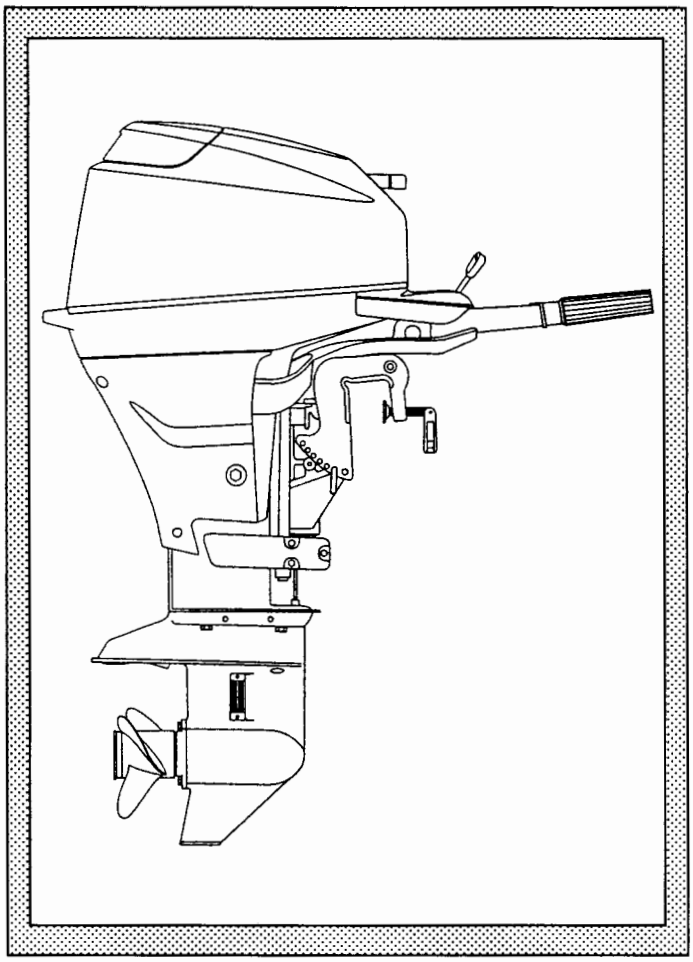

SERVICE MANUAL

4-Stroke Cycle 9.9·15

TOHATSU CORPORATION

Copyright © 2006 Tohatsu Corporation. All rights reserved. No part of this manual may be reproduced or transmitted in any form or by any means without the express written permission of Tohatsu Corporation.

Tohatsu Corp. makes no warranty, express or implied, regarding the use of this data. Tohatsu Corp. assumes no responsibility for errors or omissions nor assumes any liability for damages resulting from the use of the information contained herein. In some cases a part design may have changed since this manual was published or may not apply to your particular engine model, or a service/parts bulletin may have been issued containing important information pertaining to this model and/or a particular part. Some parts may be serial number and/or model number specific. You are strongly advised to contact your local dealer to ensure the accuracy of the data contained in this manual and to ensure the data contained in this manual applies to your particular model and serial number.

CONTENTS

Page

CHAPTER 1 SPECIFICATIONS

1. Specifications 1
2. Outline Dimensions 3

CHAPTER 2 SERVICE DATA AND TOOLS

1. Service Data and Maintenance Standards 4
2. Table of Points to Apply Sealants, Adhesives and Lubricants 12
3. Table of Tightening Torque 15
4. Tools and Instruments Required for Disassembly and Repair 17
5. How to Use Special Tools 19

CHAPTER 3 INSPECTION AND MAINTENANCE

1. Periodical Inspections 26
2. Troubleshooting 27
3. Change of Engine Oil 28
4. Change of Oil Filter 28
5. Inspection of Fuel System 29
6. Compression Test 30
7. Inspection of Timing Belt 32
8. Change of Gear Oil 33
9. Washing 34
10. Inspection of Cooling System 35

CHAPTER 4 POWER UNIT

1. General Notes on Service 36
2. Removing Power Unit 37
3. Removing Parts 37
4. Disassembling Engine 39
5. Inspection and Measurement of Engine Parts 43
6. Repair and Replacement of Engine Parts 51
7. Reassembling Engine 52

CONTENTS

CHAPTER 5 LOWER UNIT

9.9A/15A

1. Gear Housing Removal 61
2. Disassembly 64
3. Reassembly 79
4. Installation 94

9.9B/15B

1. Disassembly of Gear Case 98
2. Gear Case Assembly 103

9.9A/15A & 9.9B/15B

1. Clamp/Swivel Brackets & Drive Shaft Housing for 9.9A/15A 107
2. Clamp/Swivel Brackets & Drive Shaft Housing for 9.9B/15B 112

CHAPTER 6 RECOIL STARTER 113

CHAPTER 7 CARBURETOR AND FUEL PUMP

1. Carburetor 117
2. Fuel pump 118

CHAPTER 8 OIL PUMP 119

CHAPTER 9 ELECTRICAL SYSTEM

1. Component Parts 120
2. Wiring Diagram 121
3. Inspection 122

CHAPTER 9 TEST RUN AND INSPECTION AFTER COMPLETE ASSEMBLY

1. Test Run Tank and Test Propeller 125
2. Inspection 125

CHAPTER 1 SPECIFICATIONS

1. Specifications

Item	Model or Type	9.9A/15A	9.9B/15B
Dimensions			
Overall lenght (☆: Handle is horizontally positioned.)	MF/EF ☆ EP	945 mm (37.2 in) approx. 685 mm (27.0 in) approx.	980 mm (38.6 in) approx. 650 mm (25.6 in) approx.
Overall Width (☆: Handle is horizontally positioned.)	MF/EF ☆ EP	380 mm (15.0 in) approx. 345 mm (13.6 in) approx.	365 mm (14.4 in) approx. 345 mm (13.6 in) approx.
Overall height	S L	1,045 mm (41.1 in) approx. 1,180 mm (46.5 in) approx.	1,065 mm (41.9 in) approx. 1,210 mm (47.6 in) approx.
Transom height	S L	406 mm (16.0 in) approx. 541 mm (21.3 in) approx.	413 mm (16.3 in) approx. 562 mm (22.1 in) approx.
Weight	MF EF EP	S:51.5 kg (114 lb) approx. S:55 kg (121 lb) approx. S:53.5 kg (118 lb) approx.	L:52.5 kg (116 lb) approx. L:56 kg (124 lb) approx. L:54.5 kg (120 lb) approx.
Performance			
Maximum output	9.9 15	7.3kW (9.9 HP)/5,000 rpm 11.0kW (15 HP)/5,500 rpm	
Maximum operating range	9.9 15	4,500 – 5,500 rpm 5,000 – 6,000 rpm	
Idling (Clutch off)		950 – 1,000 rpm	
Trolling (Clutch in)		900 rpm	
Fuel consumption at full throttle	9.9 15	4 liter/hr (1.06 US gal/hr) at 5,000rpm 5.5 liter/hr (1.45 US gal/hr) at 5,500rpm	
Engine			
Engine type		4 stroke cycle engine	
Number of cylinder		2	
Bore × stroke		59 mm (2.32 in) × 60 mm (2.36 in)	
Displacement		328 ml (20.01 cu in)	
Valve system		OHC, Cross flow	
Lubricating system		Wet sump system (Trochoid type oil pump)	
Cooling system		Forced water cooling systrm (Rubber impeller rotation system)	
Starting system	MF EF/EP	Recoil starter Recoil starter & Electric starter	
Ignition system		Flywheel magneto C.D. ignition	
Spark plug		NGK DCPR6E	
Alternator out put		12V 130W	
Ignition timing		BTDC5° to BTDC35° (Electric advance)	
Carburetor	9.9 15	Horizontal butterfly valve type Horizontal butterfly valve type with acceleration pump	
Fuel primer system		Auto by-starter	
Fuel pump		Mechanical plunger type	
Direction of engine rotation		Clockwise	
Engine oil		SAE 10W – 30/40, SF/SG/SH/SJ class in API classification	
Volume of engine oil		1,000 ml (1.1 US qt)	
Speed control	MF/EF EP	Twist grip Remote control	

CHAPTER 1 SPECIFICATIONS

Item	Model or Type	9.9A/15A	9.9B/15B
Lower unit			
Clutch		Dog type, F – N – R	
Reduction gear ratio		13 : 26	13 : 28
Maximum tilt-up angle		66°	79°
Trim angle		8° to 24°	5° to 25°
Number of trim-adjustments		5 position	6 position
Tilt angle for the shallows		20° ※1	32° ※2
Steering angle		70°	70°
Allowable thickness of transom board		30 mm to 75 mm	40 mm to 60 mm
Exhaust system		Through-hub exhaust	
Capacity of fuel tank		12 liter (3.17 US gal)	
propeller mark (Standard)	9.9 15	S:9 L:9 S:9 L:9	S:9 L:8.5 S:10 L:9
Gear oil		Genuine gear oil or GL5 SAE #80 – #90	
Volume of gear oil		200 ml (6.8 US. fl. oz.) approx.	370 ml (12.5 US. fl. oz.) approx.
Warning systems			
Engine revolution limiter		6,250 rpm	
Engine oil pressure	EP	Engine oil pressure warning lamp (Red lamp ON) Engine oil pressure revolution limiter: 2,000 rpm Buzzer ON	
Optional parts			
Optional propeller (No. of blades × Diameter × Pitch mm)		10.5 (3 × 229 × 267) 8 (3 × 229 × 204) 7 (3 × 235 × 178) 6.5 (3 × 248 × 168) 6 (4 × 248 × 153) 5.5 (3 × 248 × 140)	10 (3 × 234 × 250) 9 (3 × 234 × 231) 8.5 (3 × 234 × 224) 8 (3 × 234 × 199) 7 (3 × 234 × 174) 6 (3 × 234 × 155)
Tachometer			
Remote control		Cable lenght: 7 – 30 ft	

Remark ※ 1: From thrust rod position
※ 2: From tansom board

2. Outline Dimensions

ITEM	Transom	UNITS	9.9A 15A	9.9B 15B
A		mm	380	375
B	S	mm	665	690
	L	mm	800	835
C	S	mm	406	413
	L	mm	541	562
D		mm	480	370
E		mm	610	620
F		mm	140	120
G		mm	455	470
H		mm	485	510
I		mm	330	320
J		mm	30–75	40–60
K		mm	370	425
L	S	mm	720	740
	L	mm	840	880
M	MF/EF	mm	380	365
	EP	mm	345	345
N		mm	325	325
O		mm	210	210
P		mm	432	480
Q		deg.	90	130
R		deg.	12	9
S		deg.	35	35
T		deg.	66	79
U		mm	132	140
Y		mm	—	15
Trim angle (Position)			8°–24° (5)	5°–25° (6)

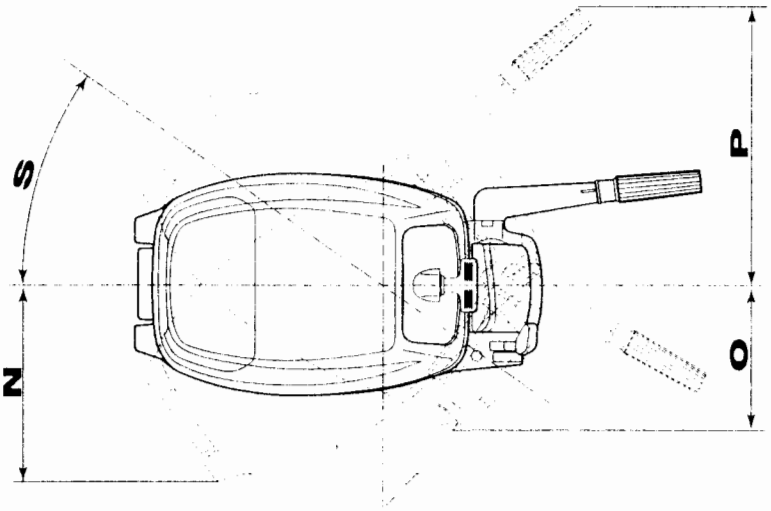

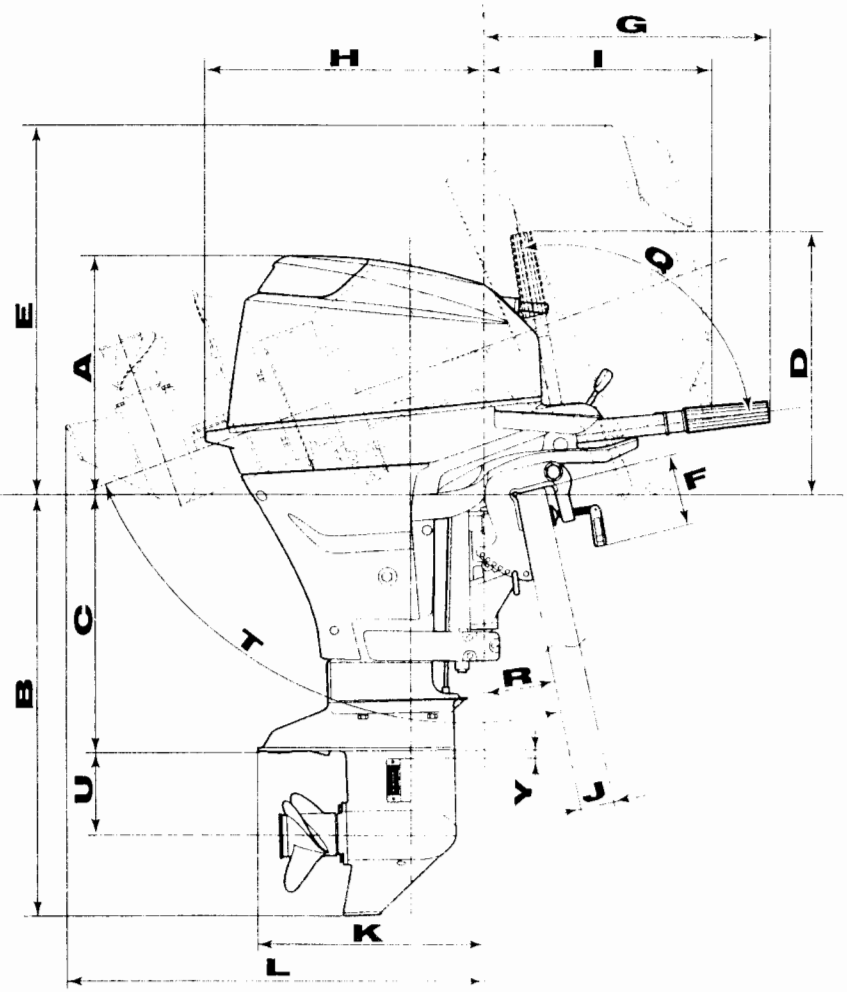

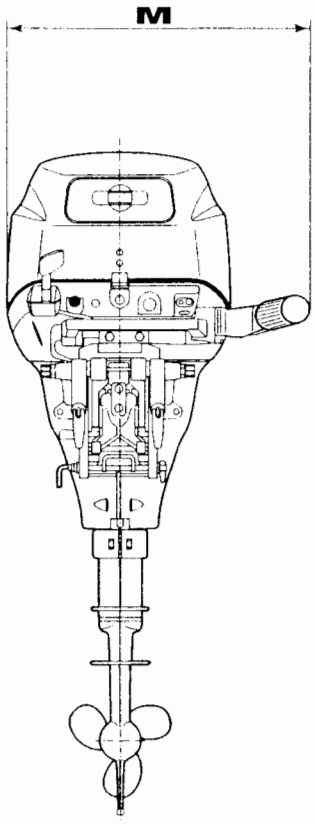

CHAPTER 2 SERVICE DATA AND TOOLS

1. Service Data and Maintenance Standards

	Part Name	Check Item	Standard value
Engine-related Items	Cylinder head	1. Carbon deposit on the combustion chamber	
		2. Scratch depth & distortion of the mounting surface	
		3. Corrosion in the mated surface	
		4. Clogging cooling water passage	
	Cylinder	1. Deposit in the water jacket	
		2. Wear of the inside cylinder diameter: Measure the bore with a cylinder gauge.	2. 59.00 mm (2.3228 in)
		3. Seizure	
		4. Scratch and wearing down in the cylinder liner	
		5. Mating surfaces of the cylinder and cylinder head	
	Piston	1. Outside diameter ● Measure the diameter at a point 7 mm above the lower end of piston skirt. ● Piston clearance	1. Diameter: 58.960 mm (2.3213 in) Piston clearance: 0.020 – 0.055 mm (0.0008 – 0.0022 in)
		2. Carbon deposit on the piston crown and in the piston ring groove.	
		3. Scratch on the sliding surface.	
		4. Measurement of clearance between the piston ring and ring groove.	4. Top: 0.04 – 0.08 mm (0.0016 – 0.0031 in) 2nd: 0.03 – 0.07 mm (0.0012 – 0.0028 in) Oil: 0.01 – 0.18 mm (0.0004 – 0.0071 in)
		5. Measurement of diameter of the piston pin hole	5. Clearance between pin and hole Loose: 0.002 – 0.012 mm (0.00008 – 0.0005 in)
	Piston ring	● End gap (Note: Measurement of the end gap: When no ring gauge is available, measure the lower part of the cylinder bore.)	
		Top	Top: 0.15 – 0.35 mm (0.006 – 0.014 in)
		Second	2nd: 0.30 – 0.50 mm (0.012 – 0.020 in)
		Oil	Oil: 0.20 – 0.7 mm (0.008 – 0.028 in)
	Piston pin	1. Outer diameter	1. 16.00 mm (0.6299 in)
	Crank shaft	1. Deflection of the crank shaft: ☆	1. Less than 0.05 mm (0.002 in) (Both ends)
		2. Outer diameter of the crank pin.	2. 29.98 mm (1.1803 in)
		3. Outer diameter of the bearing.	3. 31.99 mm (1.2594 in)
		4. Oil clearance of the bearing.	4. 0.012 – 0.044 mm (0.0005 – 0.0017 in)
		5. Side clearance of the crank shaft	5. 0.1 – 0.2 mm (0.004 – 0.008 in)
	Connecting rod	1. Inner diameter of the small end	1. 16.01 mm (0.630 in)
		2. Oil clearance of the big end	2. 0.015 – 0.041 mm (0.0006 – 0.0016 in)
		3. Side clearance of the big end	3. 0.1 – 0.25 mm (0.004 – 0.01 in)

☆: Both the main bearings of the crank shaft should be supported on V-blocks.

	Repair Limit	Measure
Engine-related Items		1. Remove carbon deposit and clean.
	2. Scratch depth or distortion is 0.1 mm (0.004 in) or more.	2. Repair. (Set #240 – #400 sandpaper on the surface plate and polish the surface for repair. Use #600 sandpaper for finishing.)
		3. Repair or replace depending on the situation.
		4. Clean and remove foreign matters.
		1. Remove foreign matters and clean.
	2. 59.06 mm (2.3252 in) or more	2. If wear is exceeding the repair limit, replace or bore the cylinder and finish by honing. Over-sized piston is 0.5 mm. (Refer to the item 4.)
		3. Replace or use an over-sized piston after boring the cylinder.
	4. When the liner cannot be repaired by means of #400 – #600 sandpaper because it is extremely scratched or scored, or the difference between the maximum wear and minimum wear is 0.06 mm (0.0024 in) or more.	4. Bore and hone to ø59.5 ± 0.01 mm (ø2.3425 ± 0.0004 in).
		To be use over size piston and ringe.
	5. When the depth of scratch or distortion in/of the mating surface is 0.1 mm (0.004 in) or more.	5. Set #240 – #400 sandpaper on the surface plate and polish the surface. Use #600 sandpaper for finishing.
	1. Outer diameter: 58.90 mm (2.3189 in) or more Piston clearance: 0.15 mm (0.0059 in) or more	1. Replace if out of the repair limit.
		2. Remove carbon residuum and clean.
		3. Repair with #400 – #600 sandpaper depending on the situation.
	4. Top: 0.10 mm (0.004 in) or more 2nd: 0.09 mm (0.0035 in) or more Oil: 0.21 mm (0.0083 in) or more	4. Replace if out of the repair limit. *
	5. 0.04 mm (0.0016 in) or more	5. Replace if out of the repair limit.
	Top: 0.5 mm (0.020 in) or more	Replace with new piston ring if wear of the cylinder liner is within the repair limit. *
	2nd: 0.7 mm (0.028 in) or more	
	Oil	
	1. 15.97 mm (0.629 in) or less	1. Replace if out of the repair limit.
	1. 0.05 mm (0.002 in) or more	1. Replace if out of the repair limit.
	2. 29.95 mm (1.179 in) or less	2. Replace if out of the repair limit.
	3. 31.97 mm (1.259 in) or less	3. Replace if out of the repair limit.
	4. 0.06 mm (0.002 in) or more	4. Replace if out of the repair limit.
	5. 0.6 mm (0.024 in) or more	5. Replace if out of the repair limit.
	1. 16.04 mm (0.631 in) or more	1. Replace if out of the repair limit.
	2. 0.060 mm (0.002 in) or more	2. Replace if out of the repair limit.
	3. 0.6 mm (0.024 in) or more	3. Replace if out of the repair limit.

*: To be replaced with a new oil ring when replacing with new top and/or second rings.
Remark: Sandpaper means Water proof paper.

	Part Name	Check Item	Standard value	
Engine-related Items	Intake valve Exhaust valve	1. Valve clearance	IN 0.13 – 0.17 mm (0.005 – 0.007 in)	
			EX 0.18 – 0.22 mm (0.007 – 0.008 in)	
		2. Outer diameter of valve stem	IN 5.48 mm (0.216 in)	
			EX 5.46 mm (0.215 in)	
		3. Inner diameter of valve guide	IN 5.51 mm (0.217 in)	
			EX 5.51 mm (0.217 in)	
		4. Clearance to valve stem	IN 0.008–0.04 mm (0.0003–0.0016 in)	
			EX 0.025–0.057 mm (0.0010–0.0022 in)	
		5. Contact width of valve seat	IN 1.0 mm (0.0393 in)	
			EX 1.0 mm (0.0393 in)	
	Valve spring	1. Free length	1. 35 mm (1.38 in)	
	Cam shaft	1. Height of cam (both IN and EX)	1. 23.90 mm (0.94 in)	
		2. Outer diameter of bearing	2. Pulley side 17.98 mm (0.708 in) Oil pump side 15.97 mm (0.629 in)	
		3. Clearance to holder (bearing)	0.02 – 0.05 mm (0.0008 – 0.0020 in)	
	Rocker arm & Shaft	1. Inner diameter	13.01 mm (0.512 in)	
		2. Outer diameter	12.99 mm (0.511 in)	
		3. Shaft clearance	0.006–0.035 mm (0.00024–0.00138 in)	
	Timing belt	1. Tension & Appearance		
	Engine block	1. Compression pressure at 500 rpm		
		With de-compressor Without de-compressor (Rocker arm in EX side is removed)	0.4 ± 0.1 MPa (5 ± 1kg/cm², 71 psi) 0.93 ± 0.1 MPa (9.5 ± 1kg/cm², 135 psi)	
Fuel-related Items	Carburetor		9.9	15
		● Setting mark	3H8A	3R3A
		● Throttle/Venturi bore	23/11.5 mm	25/21 mm
		● Main jet (MJ)	#68	#105
		● Main air jet (MAJ)	#135	#155
		● Inner diameter of main nozzle	2.2 mm	2.4 mm
		● Slow jet (SJ)	#42	#50
		● Slow air jet (SAJ)	#115	#85
		● Opening angle of throttle (at W.O.T.)	80°	80°
		● Pilot screw (PS) . . . . . Blind	(1-3/4)	(1-3/4)
		● Fuel level (from flange surface to float bottom)	14 mm (0.55 in)	14 mm (0.55 in)
		● Resistance of PTC heater * for auto-by starter at 20 °C (68 ° F)	20Ω	20Ω
		● Idle speed (Clutch in)	900 rpm	900 rpm
	Oil pump	1. Inner diameter of pump body		
		2. Clearance between outer rotor and body		
		3. Height of outer rotor		
		4. Clearance between rotor and body side		
		5. Clearance between outer rotor and inner rotor		

Remark *: PTC = Positive Temperature Coefficient Thermistor.

	Repair Limit	Measure
Engine-related Items		1. Repair if out of the repair limit.
	5.46 mm (0.215 in) or less	2. Replace if out of the repair limit.
	5.44 mm (0.214 in) or less	
	5.55 mm (0.218 in) or more	3. Replace if out of the repair limit.
	5.57 mm (0.219 in) or more	
	0.07 mm (0.0028 in) or more	4. Replace if out of the repair limit.
	0.10 mm (0.004 in) or more	
	2.0 mm (0.079 in) or more	5. Replace if out of the repair limit.
	2.0 mm (0.079 in) or more	
	1. 33.5 mm (1.319 in) or less	1. Replace if out of the repair limit.
	1. 23.75 mm (0.935 in) or less	1. Replace if out of the repair limit.
	2. 17.95 mm (0.707 in) or less	2. Replace if out of the repair limit.
	15.95 mm (0.628 in) or less	
	3. 0.09 mm (0.0035 in) or more	3. Replace if out of the repair limit.
	13.05 mm (0.514 in) or less	
	12.94 mm (0.509 in) or less	
	0.06 mm (0.0024 in) or less	
	Wear, crack or lengthen	Replace if out of the repair limit.
		Pay heed to pressure leak in compression from the rotation, sliding and sealing parts.
Fuel-related Items		
	1. 29.04 mm (1.143 in) or more	1. Replace if out of the repair limit.
	2. 0.36 mm (0.014 in) or more	2. Replace if out of the repair limit.
	3. 14.96 mm (0.589 in) or less	3. Replace if out of the repair limit.
	4. 0.11 mm (0.0043 in) or more (incl. wear of the pump cover)	4. Replace if out of the repair limit.
	5. 0.16 mm (0.006 in) or more	5. Replace if out of the repair limit.

	Part Name	Check Item	Standard value
Electrical Items	Magneto	● Ignition timing	BTDC 5° – 35° (Electric ignition advance)
		● Spark performance	10 mm (0.4 in) or more/500 rpm (Measured by genuine spark tester)
		● Spark plug	NGK DCPR6E
		● Spark gap	0.8 – 0.9 mm (0.032 – 0.035 in)
		● Alternator output	12V, 130W (5,000 rpm)
		● Resistance of coils Between white wire and yellow wire	0.27 – 0.41Ω
		Between red – white wire and black wire	148 – 222Ω
		Between black – red wire and blue wire	12.5 – 18.8Ω
		Between yellow – red wire and yellow – red wire	1.40 – 2.10Ω
		● ESG for high speed	Restricting at 6250 rpm
		● ESG for low speed	Reducing to 2000 rpm
	Ignition coil	● Resistance of primary coil Between black wire and orange wire	0.26 – 0.35Ω
		● Resistance of secondary coil Between high tension cord and core	6800 – 10200Ω
	C.D. unit	Refer to the check table (CHAPTER 9)	
	Rectifier	Refer to the check table (CHAPTER 9)	
	Starter motor	Battery Output Clutch 1. Brush length 2. Commutator under-cut 3. Commutator diameter	12V – 70AH to 12V – 100AH 12V 0.6KW Over-running clutch 12.5 mm (0.49 in) 0.5 – 0.8 mm (0.02 – 0.03 in) 30 mm (1.18 in)
	Fuse	Capacity	20A
Cooling Items	Thermostat	1. Operation of thermostat	● Start to open: 60 °C ± 1.5 °C (140 ± 3 °F)
			● Temperature at which valve opens full: 75 °C (167 °F)
			● Valve lift stroke when it fully opens: 3 mm (0.12 in) or more
	Pump impeller	Worn-out, crack	
	Pump case liner	Worn-out	
	Guide plate	Worn-out	

	Repair Limit	Measure
Electrical Items		
	Spark gap: 1.2 mm (0.0047 in) or more	Adjust the side electrode. However, if the electrode is excessively wom out, replace the spark plug.
	1. 9.5 mm (0.37 in) or less 2. 0.2 mm (0.008 in) or less 3. 29 mm (1.14 in) or less	1. Replace if out of the repair limit. 2. Replace if out of the repair limit. 3. Replace if out of the repair limit.
Cooling Items	If the valve opens at the room temperature, replace the thermostat.	
	While immersing the thermostat in water, raise the water temperature and check the temperature at which the valve opens.	
	Since there is a time lag in operation of the thermostat, keep the water temperature at 75 °C (167 °F) for about 5 minutes and measure the valve lift stroke.	
	When the blade periphery or upper/lower lip is worn, cracked or damaged.	Replace in a set.
		Replace it.
		Replace it.

	Part Name	Check Item	Standard value
Lower Unit Items	Anode	1. Gear case anode	
	Propeller shaft	● Damaged at bearing portion	
		● Damaged at oil seal portion	
	Bevel gear	● Backlash between bevel gears A and B • Refer to section 5 in this CHAPTER. • No need to adjust for 9.9A/15A.	0.05 – 0.13 mm (0.002 – 0.005 in) 〔Gauge reading 0.26 – 0.67 mm (0.0102 – 0.0264 in)〕
	Propeller		
Other Items	Oil seals	Wear-out, damage	

	Repair Limit	Measure
Electrical Items		1. Replace when it is excessively worn out.
		Replace
		Replace
	0.15 mm or more 〔Gauge reading 0.78 mm (0.0307 in) or more〕	Adjustment or replace
	Replace depending on wear, bent or damage in the circumference.	
Other Items	When the lips have been deteriorated, degraded, damaged, or the interference has worn down to 0.5 mm (0.02 in) or less.	Replace

2. Table of Points to Apply Sealants, Adhesives and Lubricants

	Items / Parts Name	Three Bond 1342	Three Bond 1373B	Instantaneous Adhesive Three Bond 1741	Three Bond 1207B	Loctite 518	Bond G17	Insulated Grease	Teflon Grease	Cold-resistant Lithium Grease	Grease for OBM	4st Engine Oil	Specified Gear Oil	Oil Compound Jyoetsu-Silicone KS-64	Silicone Sealant Loctite 5900	Remarks
Engine block	Cylinder liner											●				Inside wall
	Piston											●				Ring groove, Periphery
	Piston ring											●				Periphery
	Piston pin											●				Periphery
	Connecting rod											●				Inside big and small ends
	Metal (Cylinder block, crank case)											●				Both sides
	Crank shaft (thrust place)											●				Sliding surfaces
	Crank shaft oil seal									●						Lips
	Crank case cylinder mating surface					●										Joint part
	Valve (IN, EX)											●				Shaft, Stem head
	Valve stem seal (IN, EX)											●				Lips
	Retainer											●				Complete
	Valve spring seat											●				Complete
	Valve spring											●				Complete
	Camshaft											●				Bearing, cam
	Camshaft oil seal									●						Lips
	Cam pulley bolt	●														Thread
	Rocker arm											●				Bearing, Slipper
	Rocker arm shaft											●				Shaft, side
	Tappet adjust screw											●				Complete
	Washer (rocker arm, t=0.5)											●				Complete
	Washer (rocker arm, t=2.5)											●				Complete
	Spring (rocker arm, free length 30 mm and 51 mm)											●				Complete
	Fuel pump											●				Periphery of O-ring, end of plunger
	Oil pump											●				2ml at Suction port and discharge port , Boss part O-ring
	Oil pump O-ring (ø1.5 – 10.7)											●				
	Oil pump O-ring (ø1.5 – 8.5)											●				
	Oil pump O-ring (ø1.5 – 15.5)											●				
	Oil pressure switch	●														Thread

2. Table of Points to Apply Sealants, Adhesives and Lubricants

	Parts Name \ Items	Three Bond 1342	Three Bond 1373B	Instantaneous Adhesive Three Bond 1741	Three Bond 1207B	Loctite 518	Bond G17	Insulated Grease	Teflon Grease	Cold-resistant Lithium Grease	Grease for OBM	4st Engine Oil	Specified Gear Oil	Oil Compound Jyoetsu-Silicone KS-64	Silicone Sealant Loctite 5900	Remarks
Engine block	Oil filter											●				Seal
	Oil filter bolt	●														Thread
	Plunger ass'y											●				Inside (Pour 1ml)
	Filter cap, O-ring											●				Periphery
	Solenoid switch							●								Terminal
	Spark plug cap													●		Spark plug insertion part
							●									High tention cord
	Starter motor							●								Terminal
											●					Spread at pinion part slightly
	Starter case	●														Bolt and screw for Reel
										●						Friction plate, reel shaft part, Spiral spring, rachet
	Starter seal rubber			●												
	Engine oil											●				Oil; at oil change 1000ml at overhaul 1200ml
	Oilpan gasket				●											
Stern bracket	Clamp screw										●					Thread
Swivel bracket	Bolt (Mount bracket lower)	●														Thread
	Steering friction (Co-pilot)										●					Thread
	Steering shaft										●					
	Swivel bracket (steering shaft)										●					Sliding
	Grease nipple (bracket bolt)										●					Sliding
	(Co-pilot)										●					Thread
	Drag link										●					Sliding
	Bolt (drag link bracket)		●													Thread

2. Table of Points to Apply Sealants, Adhesives and Lubricants

	Parts Name \ Items	Three Bond 1342	Three Bond 1373B	Instantaneous Adhesive Three Bond 1741	Three Bond 1207B	Loctite 518	Bond G17	Insulated Grease	Teflon Grease	Cold-resistant Lithium Grease	Grease for OBM	4st Engine Oil	Specified Gear Oil	Oil Compound Jyoetsu-Silicone KS-64	Silicone Sealant Loctite 5900	Remarks
Gear case	Bolt (upper pump case)	●														Thread
	Upper pump case										●					Impeller sliding surfaces Joint part for water pipe guide
	Oil seal (lower pump case; drive shaft housing side)										●					Lips
		●														Periphery
	Oil seal (lower pump case; gear case side)										●					Lips
		●														Periphery
	Cam rod bushing (lower pump case)										●					Sliding
	Lower pump case														●	Down side (A type only)
													●			Inserting part
	Bolt (lower pump case)	●														Thread
	Drive shaft								●							Spline (crank shaft side)
	Sleeve (drive shaft)												●			Inside (A type only)
	Bushing (drive shaft)												●			Inside (A type only)
	Needle bearing (bevel gear B)												●			
	Taper roller bearing (bevel gear A)												●			
	Clutch push rod										●					Sliding
	Oil seal (propeller shaft housing; gear case side)										●					Lips
		●														Periphery
	Oil seal (propeller shaft housing; propeller side)										●					Lips
		●														Periphery
	Bushing (propeller shaft housing)												●			
	O-ring (propeller shaft housing)										●					
	Propeller shaft housing	●														Thread
	Propeller shaft (spline part)										●					
	Gear case												●			Oil 200ml/A, 370ml/B
	Bolt (gear case)	●														Thread
	Bevel gear B nut		●													Thread
Throttle shift Linkage	Shift shaft									●						Bearing sliding part
	Throttle link									●						Sliding
Tiller handle	Bushing (handle)										●					In and out side
	Bolt (streeing arm bracket)		●													Thread

3. Table of Tightening Torque

	Item	Thread size	Bolt or Nut	Tightening Torque		
				N-m	kg-m	lb-ft
Engine	Cylinder Block – Cylinder Head	M8 × 1.25	Bolt	28~30	2.8~3.0	20~22
		M6 × 1.0	Bolt	8~10	0.8~1.0	5.8~7.2
	Cylinder Block – Crank Case	M8 × 1.25	Bolt	23~25	2.3~2.5	17~18
		M6 × 1.0	Bolt	8~10	0.8~1.0	5.8~7.2
	Connecting Rod	M7 × 1.0	Bolt	11~13	1.1~1.3	8.0~9.4
	Tappet Lock Nut	M6 × 0.75	Nut	6~8	0.6~0.8	4.4~5.8
	Flywheel Cup	M16 × 1.5	Nut	70~90	7~9	51~65
	Drive (Timing) Pulley	M26 × 1.0	Nut	34~36	3.4~3.6	25~26
	Driven (Camshaft) Pulley	M6 × 1.0	Bolt	10~12	1.0~1.2	5.8~8.7
	Plunger Assembly	M16 × 1.5	–	19~21	1.9~2.1	12~15
	Oil Filter	M20 × 1.5	–	18	1.8	13
	Oil Pressure Switch	PT1/8	–	7~9	0.7~0.9	5~6
	Cylinder Head Cover	M6 × 1.0	Bolt	8~10	0.8~1.0	5 8~7.2
	Inlet Manifold	M6 × 1.0	Bolt	8~10	0.8~1.0	5.8~7.2
	Spark Plug	M12 × 1.25	–	15~20	1.5~2.0	11~15
	Engine Assembly	M8 × 1.25	Bolt	29~31	2.9~3.1	21~22
Stern Bracket	Clamp Screw Pad	–	Bolt	15.8	1.6	12
	Tilt Stop Strap	0.25"	Bolt	7.3	0.7	5
		0.25"	Bolt + Nut	7.3	0.7	5
	Tilt Stop Lever	0.25"	Bolt	7.3	0.7	5
		0.25"	Bolt + Nut	7.3	0.7	5
	Bracket Bolt	0.875"	Nut	13.6	1.4	10
	Distance Collar	M6 × 1.0	Bolt	15.8	1.6	12
Swivel Bracket	Co-Pilot Plate	M6 × 1.0	Bolt	15.8	1.6	12
	Co-Pilot Handle	0.375"	Nut	14.1	1.4	10
	Drag Link	0.375"	Bolt	27.1	2.8	20
	Drag Link Braket	M10 × 1.5	Bolt	44	4.5	33
	Stud Bolt (Steering Arm)	M10 × 1.5	Nut	44	4.5	33
	Cover (Lower Mount Bracket)	M8 × 1.25	Bolt + Nut	44	4.5	33

3. Table of Tightening Torque

	Item	Thread size	Bolt or Nut	Tightening Torque		
				N−m	kg−m	lb−ft
Driveshaft Housing	Mount Rubber Upper	M8 × 0.98	Bolt	20.3	2.1	15
	Drain Plug	–	–	23.7	2.4	17
Gear Case	Drain Screw	–	–	6.8	0.7	5
	Screw Plug Kit	–	–	6.8	0.7	5
	Propeller Shaft Housing	–	–	115	11.7	85
	Gear Case	M8 × 1.25	Bolt	20.3	2.1	15
	Propeller Nut	–	–	11.3	1.2	8.7
	Bevel gear B nut	–	Nut	35	3.5	25
Throttle Shift Linkage	Strap (Neutral Switch Bracket)	M6 × 1.0	Bolt	8	0.8	5.8
	Inter Rock Lever	M5 × 0.8	Bolt	2.3	0.2	1.5
	Platform	M6 × 1.0	Bolt	8	0.8	5.8
	Shift Lever	M6 × 1.0	Bolt	8	0.8	5.8
	Throttle Lever	M6 × 1.0	Bolt	8	0.8	5.8
	Pulley Assembly	M6 × 1.0	Bolt	1.7	0.2	1.5
Tiller Handle	Plate	M5 × 0.8	Bolt	8	0.8	5.8
	Retainer	M6 × 1.0	Bolt	5.6	0.6	4.3
	Steering Arm Bracket	M10 × 1.5	Bolt	44	4.5	33
Other standards	M5 Bolt, Nut	M5 × 0.8	Bolt, Nut	3 – 4	0.3 – 0.4	2.2 – 2.9
	M6 Bolt, Nut	M6 × 1.0	Bolt, Nut	5 – 6	0.5 – 0.6	3.6 – 4.3
	M8 Bolt, Nut	M8 × 1.25	Bolt, Nut	11 – 15	1.1 – 1.5	8 – 11

4. Tools and Instruments Required for Disassembly and Repair

(1) General tools

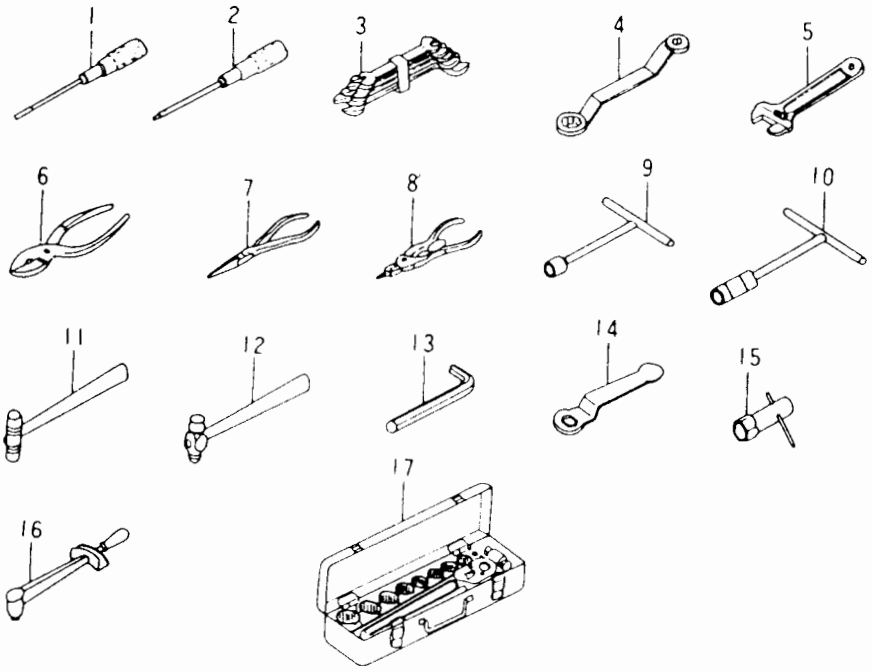

1. Straight-point screwdriver (200 mm)
   - do. - (150 mm)
   - do. - (100 mm)
2. Phillips screwdriver (200 mm)
   - do. - (150 mm)
   - do. - (100 mm)
3. Set of wrenches (6 pieces)
4. Box wrenches (10 × 13)
   - do. - (17 × 21)
   - do. - (21 × 23)
5. Adjustable wrench (300 mm)
6. Pliers
7. Needle-nose pliers
8. Snap ring pliers
9. T-bar socket wrench (10 mm)
   - do. - (12 mm)
   - do. - (13 mm)
   - do. - (17 mm)
10. T-bar universal wrench (10 mm)
    - do. - (12 mm)
    - do. - (13 mm)
11. Plastic hammer
12. Hammer
13. L-shape hexagon wrench (8 mm)
    - do. - (10 mm)
14. Box wrench (16 mm)
15. Socket wrench (16 mm)
16. Torque wrench (100 N – m)
    - do. - (12 N – m)
    - do. - (5 N – m)

    Pre-setting type box torque wrench

    (10 mm, 7N – m) .... for the tappet lock nut
17. Socket wrench set

(2) Compression gauge

(3) Test propeller

(4) Measuring instruments

The following instruments are for general use and available on the market.

Tachometer:	600 – 6,000 rpm
Universal tester:	1 Ω • 10 Ω • 10 k Ω 30 – 300 AC V, 30 DC V, Battery 3 V or less
Vernier calipers:	JIS B7507, M1 type, 300 mm
Micrometer:	JIS B7502, 0.01 mm scale unit, outside micrometer 0 – 25 mm, 25 – 50 mm, 50 – 75 mm
Cylinder gauge:	JIS B7515, 4 – 6 mm, 10 – 25 mm, 25 – 50 mm, 50 – 75 mm
Ring gauge:	JIS B7420, 5.5, 16, 25, 30, 59 mmø
Dial gauge:	JIS B7503, 0.01 mm scale unit
Feeler gauge:	JIS B7524, 0.03 – 0.3 mm measurable (Part No. 353 – 72251 – 0)
V-block:	JIS B7540
Surface plate:	JIS B7513, 500 × 500 mm

Dial gauge magnet base or dial gauge stand:

5. How to Use Special Tools

1. Flywheel cup puller (336-72214-1)

① When disassembling

Fasten the tools Ⓐ and Ⓑ to the flywheel with the bolts Ⓓ and remove the magneto nut (right-hand screw) with the socket wrench of the correct size 24. (Fig. 5-1)

Next, screw tool Ⓒ into tool Ⓑ and tighten Ⓒ with the socket wrench of the correct size 24. The flywheel can be removed. (Fig. 5-2) Be sure to use bolts (D).

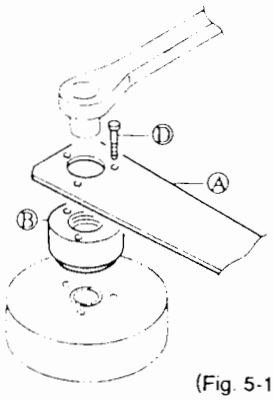

(Fig. 5-1)

② When reassembling

Before replacing the flywheel make sure that the magneto key has properly been set. After setting the washer and nut on the crank shaft, fasten tools Ⓐ and Ⓑ to the flywheel and tighten the nut.

Tightening torque: 70-90 N-m (7.0-9.0 kg-m) (51-65 lb-ft)

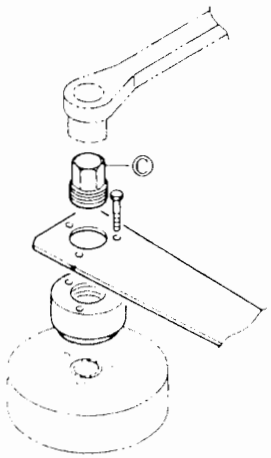

(Fig. 5-2)

2. Piston pin tool (3H6-72215-0)

After removing the piston pin clip, insert the tip of the piston pin tool into the piston pin hole and lightly tap the other end of the tool with a hammer. Hold the piston with your hand to prevent damage to the connecting rod. (When inserting the piston pin again, take the same care as removing.) (Fig. 5-3)

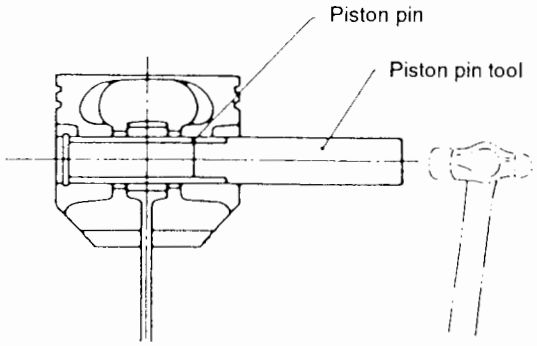

(Fig. 5-3)

3. Piston slider (3H6-72871-0)

This tool is to be used for inserting the piston into the cylinder. After inserting the piston into the tapered end of the piston slider, set the piston slider together with the piston tightly on the top of the cylinder and insert the piston into the cylinder by pushing the piston crown with fingers. (Fig. 5-4)

Note: Don't stop inserting the piston into the cylinder until all the piston rings enter the cylinder.

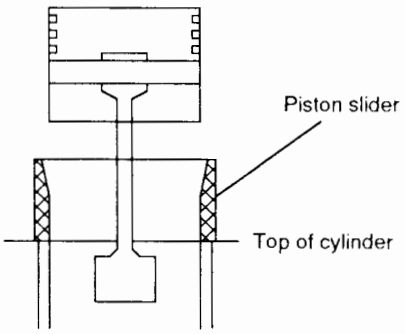

(Fig. 5-4)

4. Spring pin tool

① Spring pin
② Spring pin tool A (345-72227-0)
③ Spring pin tool B (345-72228-0)

I. To remove the spring pin from the shift rod joint

• Insert the tip of the spring pin tool A ② in the hole of the spring pin ① , tap the tool lightly with a hammer in the direction of the arrow and remove it.
(This tool may be used for removing spring pins at other locations also.)

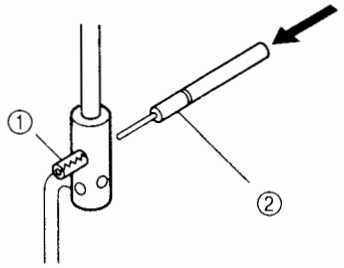

2. To insert the spring pin in the shift rod joint

• Insert the spring pin ① in the hole of the spring pin tool B ③ . Align the front end of the spring pin with the spring pin hole of the clutch lever joint, and tap the end face lightly with a hammer in the direction of the arrow, to insert the spring pin.
(This tool may be used for inserting spring pins at other locations also.)

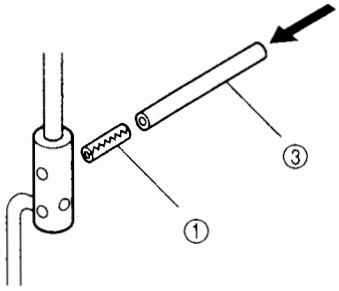

5. Needle roller bearing tool (3C8-72700-0)

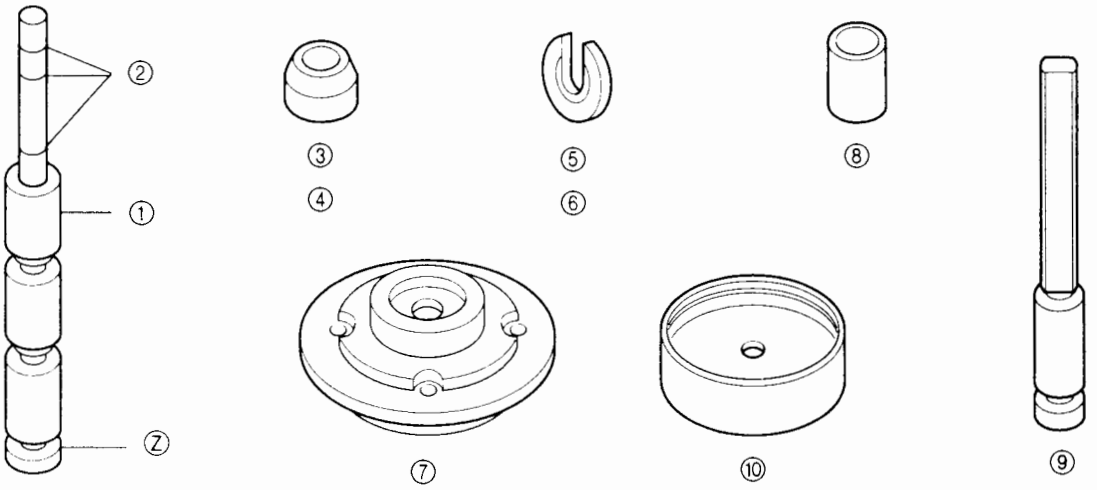

① Shaft A
② Engraved lines
③ Guide A (inside diameter 16)
④ Guide B (inside diameter 17)
⑤ Retainer A (dia. 23.5)
⑥ Retainer B (dia. 24.5)
⑦ Flange A
⑧ Shaft stopper
⑨ Shaft B
⑩ Flange B

⑤ Retainer A (dia. 23.5)
⑧ Shaft stopper
⑨ Shaft B
⑩ Flange B
ⓗ Propeller shaft housing
ⓝ Needle rollerbearing

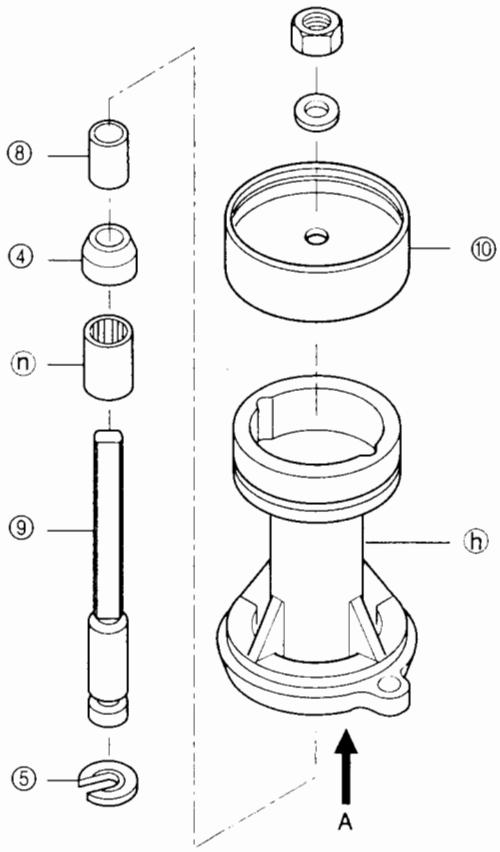

(1) Needle roller bearing in propeller shaft housing

1. Press-fit

Insert the retainer A ⑤ (outside diameter 23.5) in the groove of shaft B ⑨, then place the needle roller bearing ⓝ, guide B ④, shaft stopper ⑧ on top of it.

> Note:
> Make sure you set the tapered end of guide B, end face of needle roller bearing with no characters written on it, and the face with the V-groove of retainer A, so that they all face the threaded end of the shaft.

Insert the assembly you have just set into the propeller shaft housing ⓗ, in the direction of the arrow A shown in the figure on the left. Assemble flange B ⑩ as shown in the figure, and tighten the assembly with the nut/washer so that it is firmly secured.

2. Removal

To remove the needle roller bearing, set only the retainer A in the grove of shaft B, similar to the press-fitting procedure, and insert it in the direction of the arrow shown in the figure. (Make sure that the oil seal of the propeller shaft housing has been removed before you start removing the needle roller bearing.)

Then set the flange B as shown in the figure, and tighten using the nut/washer until the needle roller bearing is removed. (Use the propeller shaft housing spigot of diameter 65.5 in the hole of flange B, and make sure that the center of the hole of flange B is not displaced from the center of the shaft.)

> Note:
> Do not re-use a needle roller bearing, which has been removed.

① Shaft A

③ Guide A (inside diameter 16)

⑤ Retainer A (dia. 23.5)

⑦ Flange A

⑧ Shaft stopper

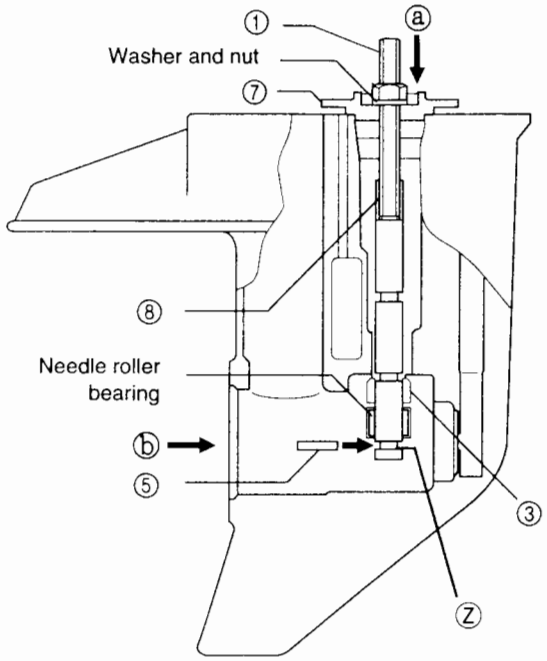

(2) Needle rollerbearing of gear case

1. Press-fit

Insert the shaft A ① in the direction of the arrow ⓐ in the gear case. Insert the guide A ③ and needle bearing in order, in the direction of arrow ⓑ in the shaft A, and set the retainer A⑤ (outside diameter 23.5) in the groove of Ⓩ. (Make sure that the larger diameter step in guide A, the end face of the needle roller bearing with no characters, and the V-groove of retalner A are all facing the threaded side of the shaft.) Then set the shaft stopper ⑧ and flange A⑦ in order, so that the shaft passes through from the side ⓐ in the direction of the arrow ⓐ shown in the figure on the left. Insert flange A in the spigot (hole for lower pump case), support the diameter of flange A with your hand, set the washer and nut and tighten the nut so that the shaft is firmly secured. The press-fit of the needle bearing is complete at this step. (Flange A has many steps; use the part with dia. 43, having a hole for the lower pump case and a spigot.) Now. if you loosen the nut and remove the retainer A, the tool can be disassembled.

2. Removal

Insert the shaft A in the direction of the arrow ⓐ, similar to the press-fit procedure. Insert the retainer A in the groove of Ⓩ of the shaft A from the direction of the arrow ⓑ. Set flange A only so that the shaft passes through it, and secure it similar to the press-fit procedure. Set the nut and washer and tighten the nut until the needle roller bearing can be removed.

6. Socket and wrench for bevel gear B nut

① Gear case
② Bevel gear B nut
③ Drive shaft
④ Bevel gear B

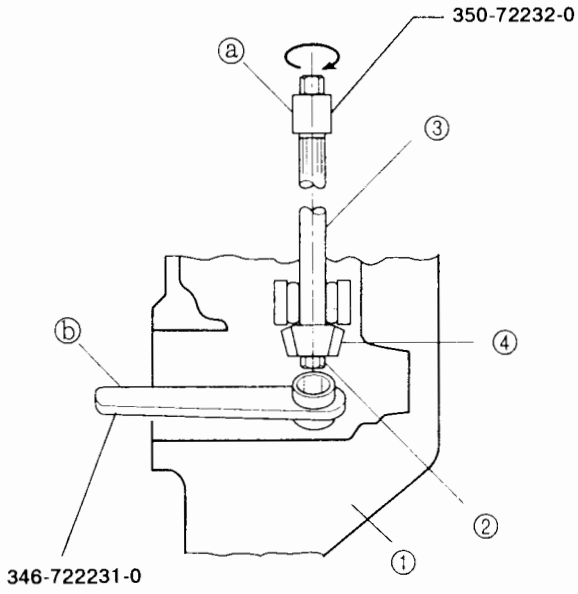

• Secure the bevel gear B nut ② in the gear case ① using tool ⓑ. Tighten tool ⓐ, inserted in the spline on the engine side of drive shaft ③, to the specified torque.

Note:
The threaded part of the bevel gear B nut and drive shaft must be completely degreased before applying a coating of thread locking agent (Three Bond 1373-B). Do not apply an excessive amount of locking agent.

Tightening torque: 30-35 N – m
3.0-3.5 kg – m
22-25 lb – ft

7. Clutch pin snap tool (350-72229-0)

① Clutch
② Groove marked on the forward side

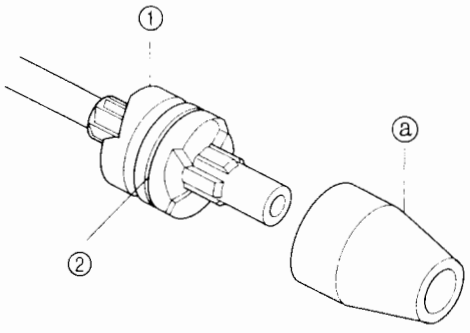

• Install clutch spring, clutch push rod, clutch and clutch pin on the propeller shaft. Fit tool ⓐ on the propeller shaft, so that the clutch pin snap spreads out gradually along the tapered part, insert it in the groove and install it.

Note:
Do not re-use a snap ring that has been removed.

8. Backlash measuring tool

① Shaft
② "O" ring
③ Collar
④ Plate
⑤ Bevel gear A
⑥ Bevel gear B
⑦ Drive shaft
⑧ Lower pump case
⑨ Clamp A/B
⑩ V-groove

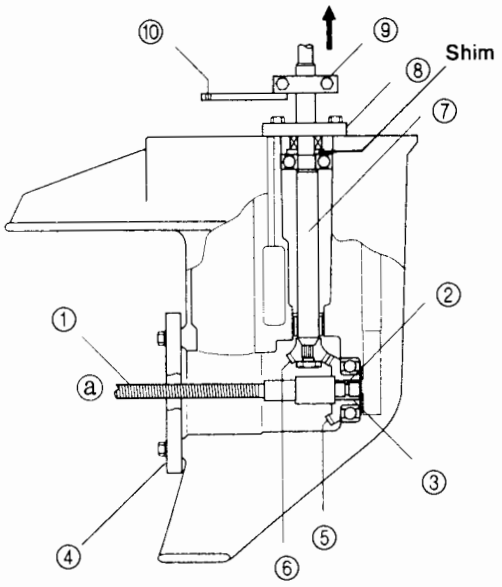

1. To measure the backlash between bevel gears A and B, first remove the propeller shaft housing and the propeller shaft bevel gear C from the gear case. Fit the O-ring ② and the collar ③ in the groove at the front end of the shaft ① , and screw-in the plate ④ on the threaded part of the shaft, Insert the collar side of the shaft in the bearing of bevel gear A ⑤ , and fit the plate on the gear case.
   If the threaded portion of ⓐ is small, the shaft presses against the bevel gear A and the plate cannot be fitted completely, therefore, make sure the threading on ⓐ is adequate.
   Using a screw driver on the ⊖ slot on the end face of the shaft, screw-in the shaft and secure it so that the bevel gear A does not rotate. (Take care to avoid excessive tightening.)

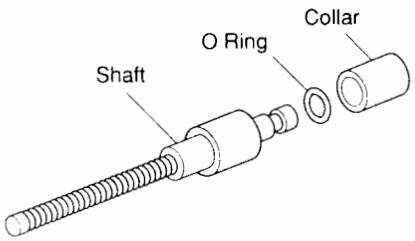

① Drive shaft
② Clamp A
③ Clamp B
④ Groove D

2. Mount clamps A ② and B ③ on the drive shaft ① . Pull up the drive shaft in the direction of the arrow while turning it and read the deflection at the notch D ④ on the dial gauge.

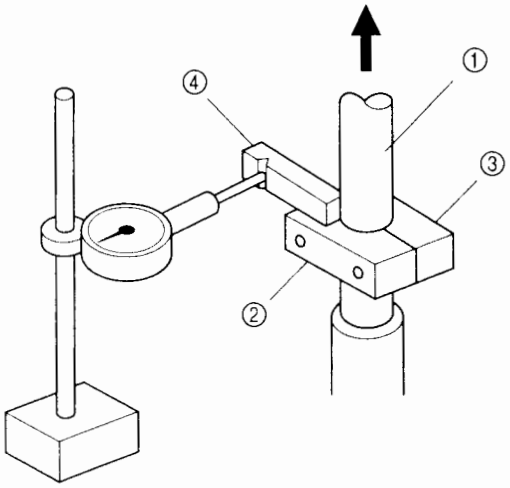

Dial gauge reading
Correct backlash : 0.26-0.67 mm
0.0102-0.0264 in

Types of adjusting shims :
0.1, 0.15, 0.3, 0.5 mm
0.004, 0.006, 0.012, 0.020 in

The relation between dial gauge reading and required shim thickness is shown in the table.

Notes:
1. Determine Dial Gauge Reading range in table that has a low end value closest to the obtained dial gauge reading.
2. Find corresponding Shim Thickness value in the table.
3. Install or remove shims to increase or decrease shim thickness by the value specified.
4. Re-check the backlash measurement.

Gauge Reading		Shim Thickness + Increase shim thickness − Decrease shim thickness	
in	mm	in	mm
0 – 0.0043	0 – 0.11	– 0.0079	– 0.2
0.0044 – 0.0118	0.12 – 0.30	– 0.0039	– 0.1
0.0119 – 0.0193	0.31 – 0.49	0.0000	0.0
0.0194 – 0.0268	0.50 – 0.68	+ 0.0039	+ 0.1
0.0269 – 0.0343	0.69 – 0.87	+ 0.0079	+ 0.2
0.0344 – 0.0417	0.88 – 1.06	+ 0.0118	+ 0.3
0.0418 – 0.0492	1.07 – 1.25	+ 0.0157	+ 0.4
0.0493 – 0.0606	1.26 – 1.54	+ 0.0197	+ 0.5

■ =Acceptable range

Take the following precautions during measurement:
- Make sure that the shaft to which the bevel gear is attached, does not rotate more than the backlash amount even if the drive shaft is lightly rotated.
- Confirm that the drive shaft bearing B is secured only to the lower pump case. Clamps A and B must be fitted as close to thc lower pump case as possible.
- After securing the gear case and the dial gauge, pull up the drive shaft while rotating it and take the dial gauge reading. The measurements should be made such that play does not occur in other parts (deflection of drive shaft, play between drive shaft and bearing).

9. Bevel gear A bearing puller (3A3-72755-0)

① Bevel gear A bearing
② Hexagonal part
③ Plate

- To remove the bevel gear A bearing ① , set the puller in the gear case as shown in the figure and tighten the hexagonal part ② using a wrench.
- Plate ③ contains many holes. Use the holes for the mounting bolts of propeller shaft housing which match the pitch and fit the plate.
- Do not re-use bearings.

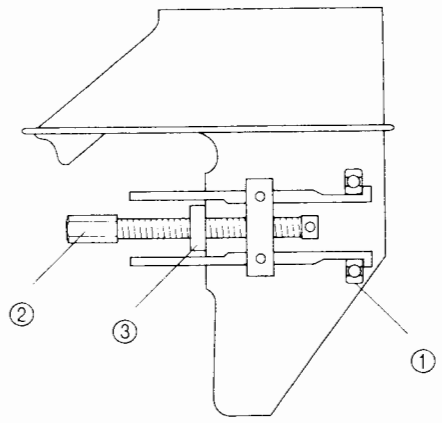

CHAPTER 3 INSPECTION AND MAINTENANCE

1. Periodical Inspections

Classification	Part name	Inspection frequency						Check and maintenance	Remarks
		First 20 hours or 1 month	Every 50 hours or 3 months	Every 100 hours or 6 months	Every 200 hours or 12 months	Every 300 hours or 18 months	Every 400 hours or 24 months		
Fuel system	Carburetor			○	○	○	○	Overhaul and adjust.	
	Fuel filter	○	○	○	○	○	○	Check and clean filter.	
	Piping	○	○	○	○	○	○	Check any damage to pipe and fuel leak from pipe joint.	
	Fuel tank	○	○	○	○	○	○	Clean.	
Ignition system	Spark plug	○		○	○	○	○	Check spark gap and remove carbon deposits or Replace.	0.8~0.9mm
Starting system	Starter rope	○	○	○	○	○	○	Check wear.	
	Starter motor			○	○	○	○	Check for salt deposits and the battery cable condition.	
	Battery	○	○	○	○	○	○	Check installation, fluid quantity, gravity.	
Engine	Engine oil & Filter	○ Replace		○ Replace	○ Replace	○ Replace	○ Replace		
	Valve clearance	○			○		○	Check and adjust.	
	Compression pressure				○		○	Check.	
	Combustion chamber					○		Clean.	Including valve lapping
	Timing belt			○	○	○	○	Check wear, crack and lenghthen	
Lower system	Propeller	○	○	○	○	○	○	Check any bent, damage, wear in blade.	
	Gear oil	○ Replace	○	○ Replace	○ Replace	○ Replace	○ Replace	Change or replenish oil. Check water seepage into oil pan.	Genuine gear oil (GL5, SAE80 – 90),
	Anode		○	○	○	○	○	Check corrosion and wear.	
	Water pump impeller		○	○	○	○	○	Wear or crack	
Bolts, nuts		○	○		○			Retighten	
Sliding parts, rotating parts, grease nipples		○	○	○	○	○	○	Grease up.	

Note: The owner's manual recommends the user to get the outboard motor overhauled in whole every 300-hours running.

2. Troubleshooting

	Engine failing to start	Engine starting but stopping soon	Poor idling	Poor acceleration	Engine speed abnormally high	Engine speed abnormally low	Boat speed low	Overheating of engine	Possible cause
FUEL SYSTEM	●	●							Empty fuel tank
	●	●	●	●		●	●	●	Incorrect connection of fuel system
	●	●	●	●		●	●	●	Air entering fuel line
	●	●	●	●		●	●	●	Deformed or damaged fuel hose
	●	●	●	●		●	●	●	Closed air vent on fuel tank
	●	●	●	●		●	●	●	Clogged fuel filter, fuel pump, or carburetor
			●	●		●	●	●	Use of improper engine oil
	●	●	●	●			●	●	Use of improper gasoline
	●			●					Excessive supply of fuel
	●	●	●	●		●	●	●	Poor carburetor adjustment
ELECTRICAL SYSTEM	●	●	●	●		●	●	●	Spark plug other than specified
	●	●	●	●		●	●		Dirt, soot, etc. on spark plug
	●	●	●	●		●	●		No spark or weak spark
	●								Short circuit of engine stop switch
	●		●	●		●	●		Ignition timing incorrect
	●								Lanyard stop switch not in RUN position. Lock plate not fitted.
	●								Disconnection of wire or loose ground connection
	●								Blown 20 Amp fuse in the starting circuit
	●								Not shifted to neutral position
	●								Weak battery or battery connections are loose or corroded
	●								Ignition key switch failure
	●								Wiring or electrical connection faulty
	●								Starter motor or starter solenoid failure
	●								Faulty Auto-By-Starter
COMPRESSION SYSTEM		●	●	●		●	●		Low compression
			●					●	Carbon deposits in the combustion chamber
				●			●		Incorrect valve clearance
								●	Low oil pressure/level
OTHERS	●		●	●		●	●		Incorrect adjustment of throttle link
							●	●	Insufficient cooling water flow, clogged or defective pump
			●				●	●	Faulty thermostat
				●	●		●	●	Cavitation or ventilation
				●	●	●	●	●	Incorrect propeller selection
			●	●	●	●	●	●	Damaged and bent propeller
				●	●		●	●	Improper thrust rod position
				●	●	●	●	●	Unbalanced load on boat
				●	●	●	●	●	Transom too high or too low

3. Change of Engine Oil

Engine oil mixed with dirt or water will dramatically shorten the life of the engine.

① Stop the engine and set it in a tilted position.
② Remove the upper motor cover and oil filter cap. Allow it to cool.
③ Turn the outboard so that the drain hole is facing downward.
④ Put drain pan under the oil drain screw.
⑤ Remove the oil drain screw and completely drain oil from the engine.
⑥ Tighten the oil drain screw.
⑦ Reset the engine in a vertical position.
⑧ Fill the engine through filler port with recommended oil (see chart below) to the upper dipstick mark.
⑨ Tighten the oil filler cap.

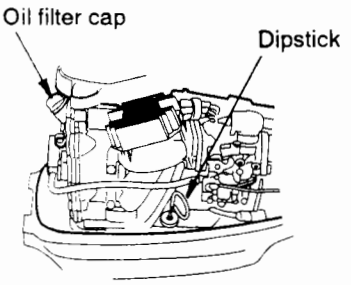

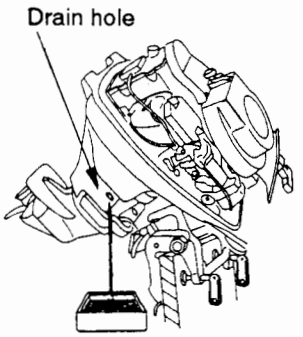

(Note)
Recommended engine oil:
4 stroke engine oil . . . . . Use SAE 10W-30/40 of rated SF, SG, SH or SJ.
Use the proper viscosity oil from the chart below. This chart is based on the atmospheric temperature where the engine will be used.
Oil capacity . . . . . 1,000 mL

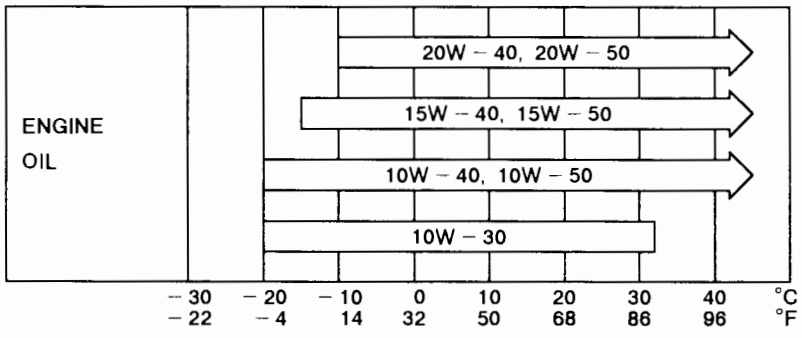

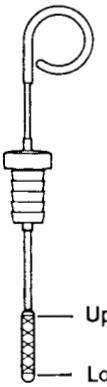

4. Change of Oil Filter

① Drain oil from the engine.
② Place a rag or towel below the oil filter to absorb any spilled oil.
③ Unscrew old filter by turning the filter to the left.
④ Clean the mounting base. Apply film of clean oil to filter gasket.
Do not use grease. Screw new filter on until gasket contacts base, then tighten 3/4 to 1 turn.

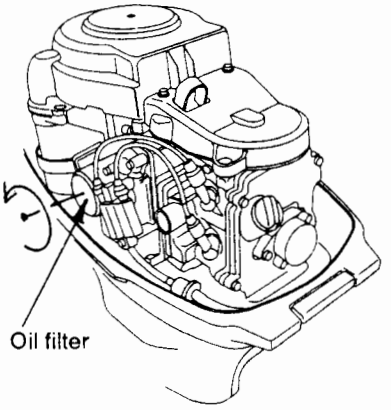

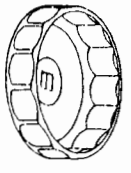

Oil filter wrench

5. Inspection of Fuel System

Fuel filters are provided inside the fuel tank and engine.

① Engine filter

Replace the filter provided inside of engine cover if there is water or dirt inside.

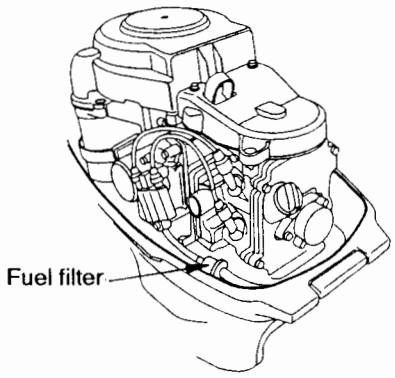

Notes:
- Remove the fuel connector for replacing the fuel filter.
- Be careful not to connect the fuel filter in wrong direction.
- Fasten the hose with the clip without fail.

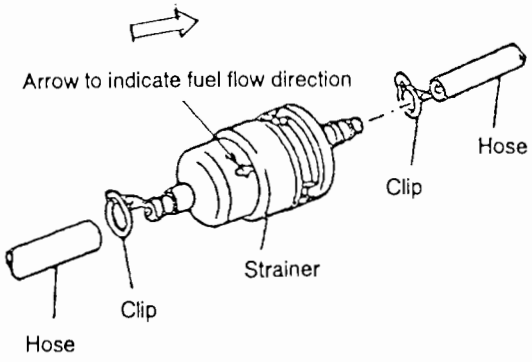

② Fuel tank filter

Remove the fuel pickup elbow of the fuel tank by turning it clockwise and clean the fuel filter.

③ Fuel tank

Water or dirt in the fuel tank will cause engine performance problems.

Check and clean the tank at specified times or after the motor has been stored for a long period of time (over three monts).

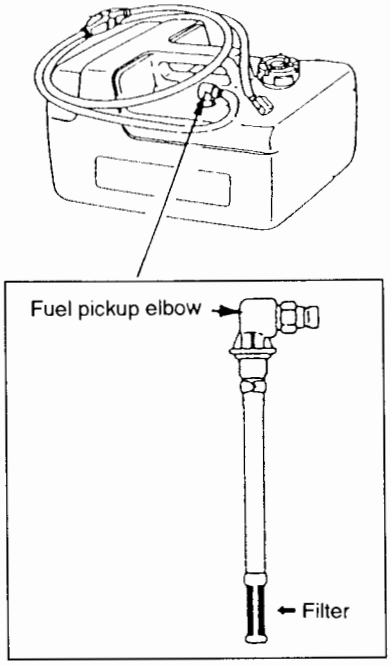

④ Idle carburetor adjustment

Turn the throttle stop screw with a screwdriver so that engine speed becomes as specified bolow.

Notes:
- Adjust engine speed with a tachometer after warming up the engine.
- Specified engine speed
  Clutch off: 950-1,000 rpm
  Clutch in : 900 rpm

Remarkes: The pilot screw is not adjustable.

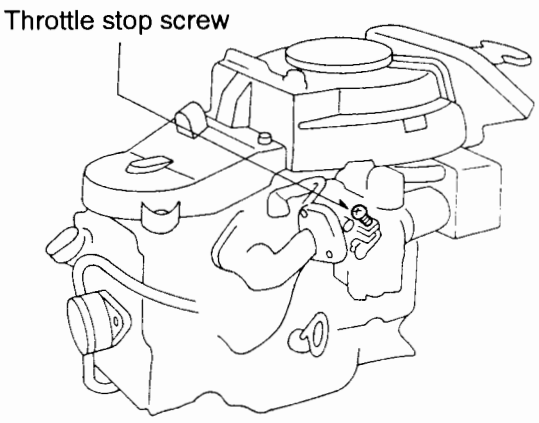

6. Compression Test

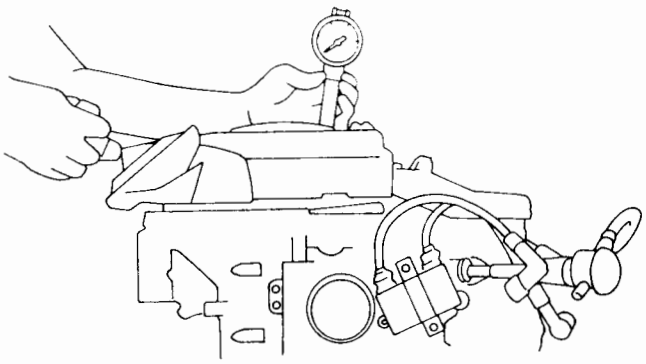

① Remove the spark plugs after engine is warm.

② Install the compression gauge in the spark plug hole.

③ Open the throttle grip.

④ Pull the recoil starter several time as quickly as possible so that the pointer of the compresion gauge reaches maximum.

Notes: Standard compression pressure at 500 rpm
With de-compressor : 0.4 ± 0.1MPa
(5 ± 1kg/cm²)
(71 psi)
Without de-compressor : 0.93 ± 0.1MPa
(9.5 ± 1kg/c m²)
(135 psi)
(Remove the rocker arm for EX side)

⚠ CAUTION

Through measurement of compression pressure, leave the lock from the stop switch.

- Valve clearance adjustment

Valve clearance adjustment must be performed when the engine is cool, piston must be the top dead center of compression stroke.

Perform the following adjustment steps:

① Remove the belt cover, spark plugs and cylinder head cover.

② Turn the driven pulley and align "1 and ○" mark on the drivn pulley with the "▽" mark on the cylinder head.

③ Adjust the intake and exhaust valve clearance for cylinder #1.

- Loosen the lock nut.
- Insert a feeler gauge between the valve end and the adjusting screw.
- Set the valve clearance by the adjusting screw.
- Tighten the lock nut.
- Again check the valve clearance.

④ Turn the driven gear and align "2 and ○" mark on the driven pulley with the "▽" mark on the cylinder head.

⑤ Adjust the intake and exhaust valve clearance for cylinder #2.

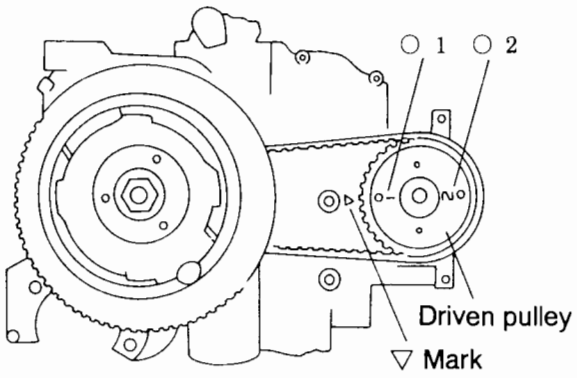

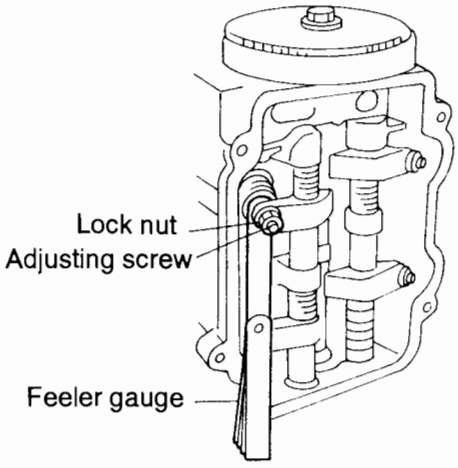

Valve clearance	IN: 0.13-0.17 mm (0.005-0.007 in)
	EX: 0.18-0.22 mm (0.007-0.009 in)

Note:
When loosening and tightening lock nut, hold the adjusting screw with a valve clearance driver to prevent it from moving.
Tightening torque of the lock nut:
6-8 N – m (0.6-0.8 kg – m) (4.4-5.8 lb – ft)

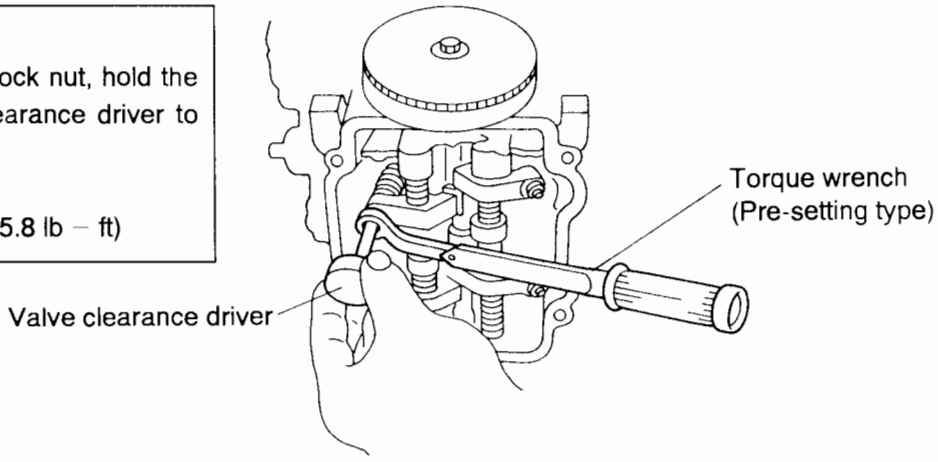

7. Inspection of Timing Belt

If cracks, wear, lengthening or other damage is found, replace the timing belt.

Remarks) Limit of elongation: More than 10 mm (0.4 in) deflection by pushing with your finger.

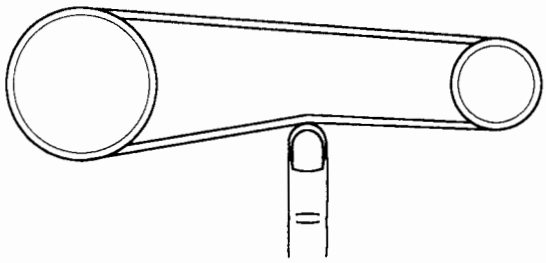

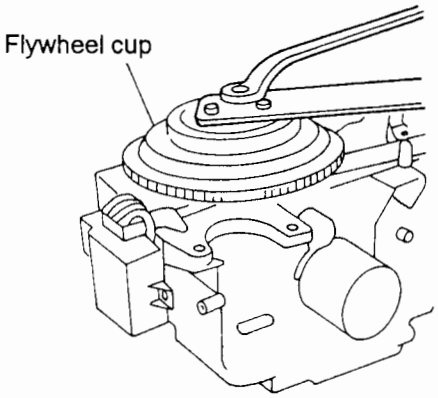

Replacement of timing belt

① Remove the parts in following order.

- Spark plugs
- Recoil starter
- Magneto flywheel cup
- Alternator assembly
- Alternator bracket

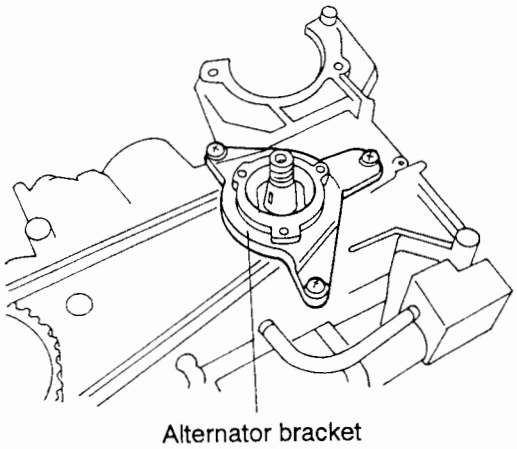

② Turn the crank shaft and align " ○ " mark on the drive pulley with the " ○ " mark on the cylinder head.

③ Remove the timing belt from the driven pulley side.

④ Install the timing belt from the drive pulley side.

Notes:

- After installing the timing belt, when aligning " ○ " mark on the drive pulley with " ○ " on the cylinder block, please confirm that the "1 & ○ " or "2 & ○ " mark on the driven pulley is aligned with the " ▽ " mark on the cylinder head.
- Always keep the timing belt away from any oil and grease.

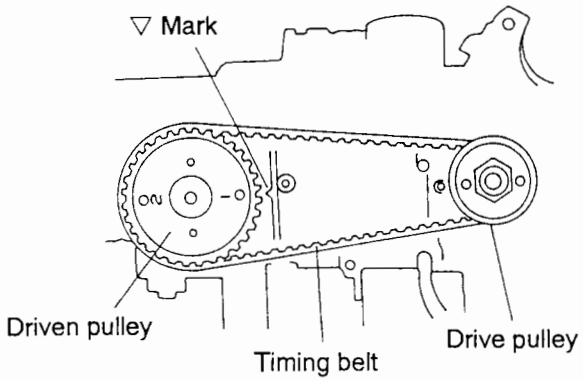

7. Change of Gear Oil

1) Remove the oil plugs (upper and lower), and completely drain the gear oil into a pan.

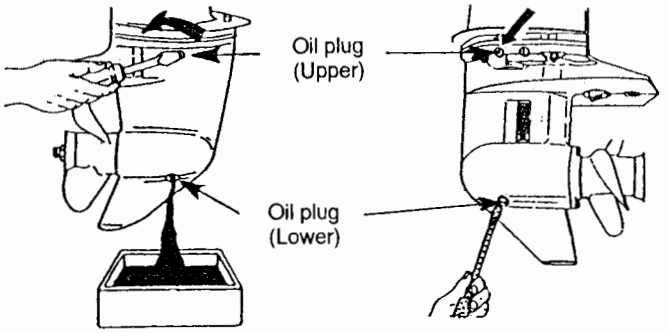

2) Insert the oil tube nozzle into the lower oil plug hole, and fill with gear oil by squeezing the oil tube until oil flows out of the upper plug hole.

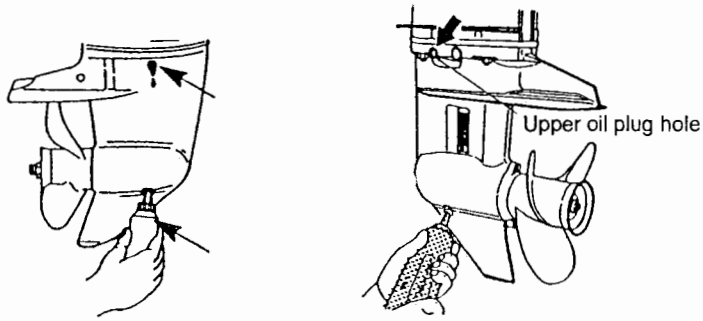

3) Install the upper oil plug, and then remove oil tube nozzle and install the lower oil plug.

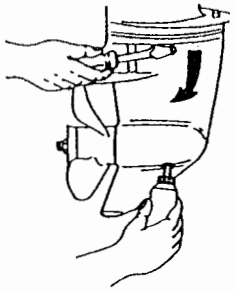

Note:
Use genuine gear oil or the recommended one (API GL-5: SAE #80 to #90)

Required volume: approx. 200 mL 6.8 US. ft. oz.

Required volume: approx. 370 mL 12.5 US. ft. oz.

8. Washing

⚠ WARNING

Before flushing, remove the propeller and the forward thrust hub.

⚠ WARNING

Never start or operate the engine indoors or in any space which is not well ventilated. Exhaust gas contains carbon monoxide, a colorless and odorless gas which can be fatal if inhaled for any length of time.

Use a flushing attachment. 9.9A/15A

① Remove propeller. Install the flushing attachment so the rubber cup fits tightly over the cooling water intake.

② Attach a water hose to the flushing attachment. Turn on the water and adjust the flow so water is leaking around the rubber cup to ensure the engine receives an adequate supply of cooling water.

③ Start the engine and run it at idle speed in neutral shift position.

④ Adjust water flow (if necessary) so excess water continues leaking out from around the rubber cup to ensure the engine is receiving an adequate supply of cooling water.

⑤ Check for a steady stream of water flowing out of the water pump indicator hole. Continue flushing the outboard for 3 to 5 minutes, carefully monitoring water supply at all times.

⑥ Stop the engine, turn off the water, and remove the flushing attachment. Reinstall the propeller.

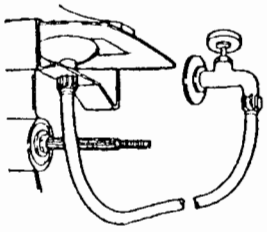

Use a flushing attachment 9.9B/15B

- Remove the water plug from the motor, and screw in the flushing attachment (hose adapter).
  Connect a hose to the flushing attachment to flush out the inside of the motor with water. (Be sure to seal the water strainer and sub water strainer, located in the gear case, with tape.)
- With the shift lever in Neutral (N), run the engine at a low speed.

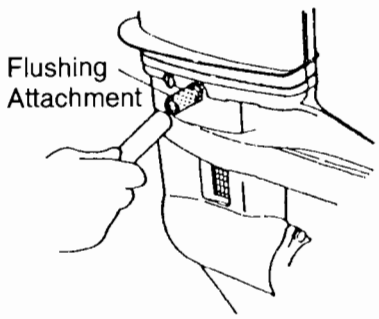

0. Inspection of Cooling System

Thermostat test

1. Put the thermostat in a proper vessel and pour water (or warm water) into it.
2. Heat the vessel together with the thermostat inside, and check to see if the valve operates normally.

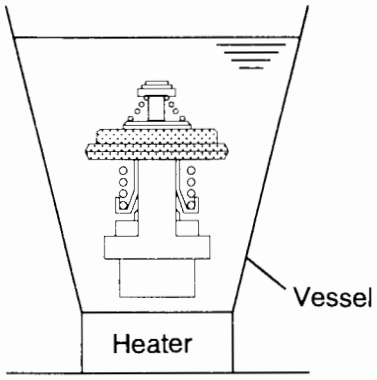

- Valve operation start temperature: 60 °C ± 1.5 °C
  140 °F ± 3 °F
- Valve full open temperature: 75 °C ± 1.5 °C
  167 °F ± 3 °F
- Valve full open lift: 3 mm or more

Water pump impeller replacement 9.9B/15B

1. Remove the upper side spring pin (3-12) from the shift rod joint with the spring pin tool.

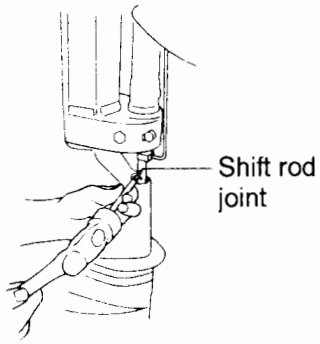

2. Remove the four (4) gear case nuts and the pull the gear case assembly.
3. Remove the three (3) pump case bolts and the pull up the pump case (with the liner).

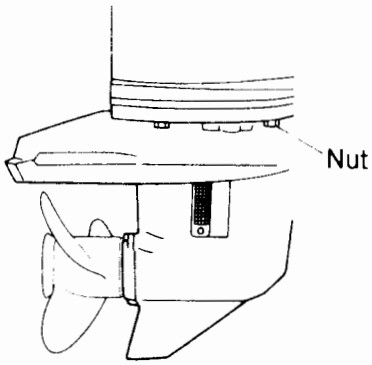

4. Remove the pump impeller and replace it with new one.

Note:
Besides the impeller, inspect the guide plate and liner also. If they are badly worn, replace them.

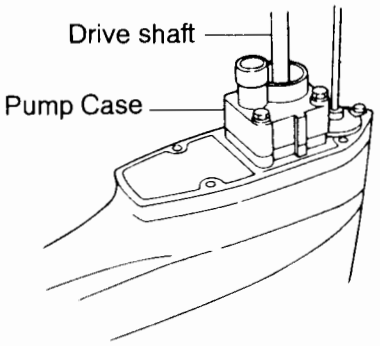

1. Lower water pipe grommet
2. Water pump case
3. Pump case liner
4. Pump impeller
5. Water pump guide plate
6. Lower water pump case
7. O-ring
8. Pump impeller key
9. Pump case bolt

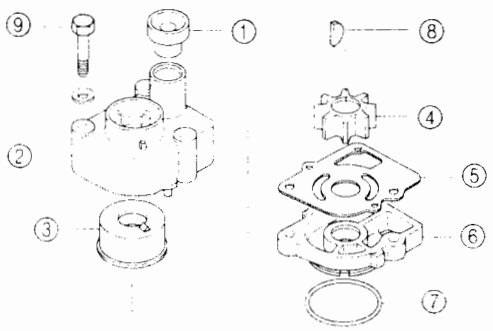

CHAPTER 4 POWER UNIT

1. General Notes on Service

When servicing the engine, pay attention to the following matters that are must-follow instructions and general notes on servicing the outboard motor in whole.

(1) When servicing the outboard motor, be sure to securely fix it on a proper workstand.
For servicing the power head, it is convenient to use the setting board.

(2) Be careful not to scratch or damage the mating surfaces of the cylinder, cylinder head, drive shaft housing and coated surfaces, etc. during servicing.

(3) Don't reuse packings, gaskets, O-rings, split pins that are once removed for servicing. Replace them with new ones when reassembling. Deformed snap rings must be also replaced.

(4) Be sure to use genuine parts. Always use genuine or specified oil and grease.

(5) For services that require to use a special tool(s), use the specified tool(s) following the instructions.

(6) On disassembling and removing parts, pay careful attention to mating point marks of respective parts. If no marks on it , make simple marks at those mating points for convenience for reassembling.

(7) To avoid losing small parts, temporarily restore bolts, nuts, washers, and other small parts to their respective original positions as far as circumstances permit.

(8) When parts are removed for disassembling, dust them off and wash them with solvent and then check to see if they are worn or damaged.

(9) While reassembling, pay attention to every detail such as mating, preciseness in centering, air-tightness, lubrication, grease-up, cleanliness of oil and fuel paths, packing, wiring, piping, etc.

1) When fastening a part for which many bolts and nuts are used (cylinder head, crank case, etc.), carefully tighten the bolts and nuts in order from inner ones to outer ones diagonally or circularly to avoid uneven tightening. (When removing bolts and nuts from such a part, carefully loosen and remove them in the reverse manner.)

2) When inserting an oil seal, be careful in setting the correct side up nor to scratch the mating surface (lip) to the shaft. Apply grease onto the lips.

3) When applying liquid sealant, take care of its quantity and thickness. If too much sealant is applied, the excess may not only stick out and flow into the case but also have a bad influence. When using an adhesive, carefully follow the instructions.

4) If a fastener is hard to loosen and remove because of rust, spray penetrating oil to loosen and remove it after five or more minutes.

5) For details of service standards, tightening torques, parts that are specified to apply sealant, glue, grease, etc., refer to the service data table.

6) Bolts, nuts, and washers are indicated by the symbols below.

H820	– Hexagon headed bolt	Diameter 8 mm Length 20 mm
N8	– Normal hexagon nut	Diameter 8 mm
L8	– Hexagon lock nut	Diameter 8 mm
W6	– Plain washer	Diameter 6 mm
SW6	– Spring washer	Diameter 6 mm
Screw 620	– Pan headed screw	Diameter 6 mm Length 20 mm

(10) Work carefully during maintenance and repair to avoid injuries and accidents.

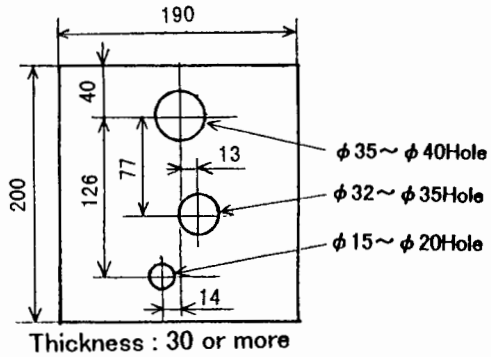

Thickness : 30 or more
Unit : mm
Setting board for power unit

2. Removing Power Unit

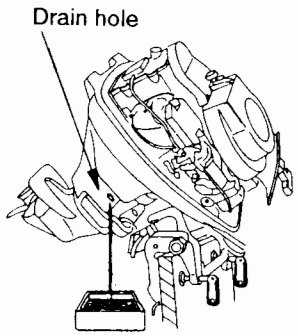

① Drain out the engine oil.

② Disconnect or remove the following connections, wires, hoses, links, etc.

- Terminals of the battery cord
- Plug terminals of the stop switch
- Plug terminals of pilot lamps
- Fuel hose
- Wire for start in gear protection
- Throttle link
- Hose for tell-tale
- Oil level gauge

③ Remove the engine fitting bolts (H835-6) and lift the power unit upwards.

3. Removing Parts

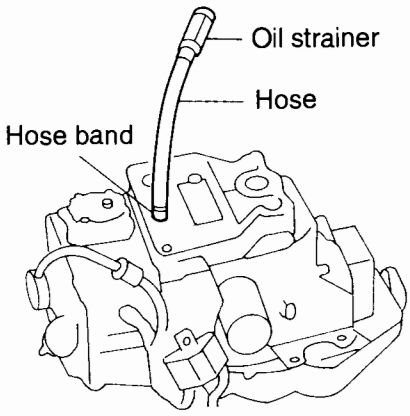

1. Oil strainer

① Cut the hose band and then remove the oil strainer with the hose from the nipple.

2. Recoil starter and belt cover

① Remove the fitting bolt (MF: H620-4 & H630-3, EF & EP: H620-3 & H630-4) and then remove the recoil starter assembly and the belt cover.

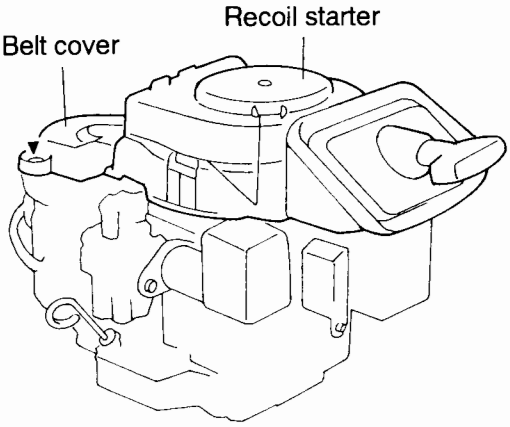

3. Ignition coil

① Remove the plug cap from the spark plug.

② Remove the ignition coil fitting bolt (H625-2) and then remove ignition coil.

4. C. D. Unit

① Remove the C.D. unit fitting bolt (H620-2) and then remove the C.D. unit.

5) Magneto flywheel cup

① Remove the flywheel cup with a special tool according to the instructions of "How to Use Special Tools" (Chapter 2, 5).

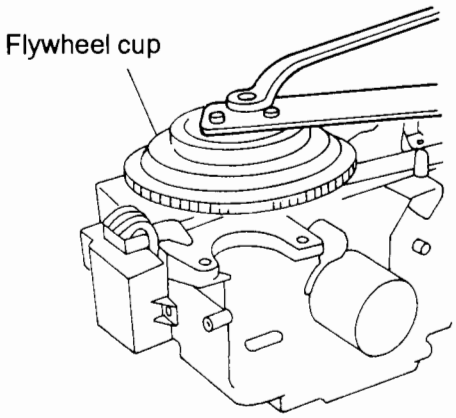

6) Alternator

① Remove the alternator fitting screw (Screw 630-3) and then remove the alternator.

7) Pulser coil

① Remove the pulser coil fitting screw (Screw 516-2) and then remove the pulser coil.

8) Startor motor and starter solenoid

① Remove the starter motor fitting bolt (H825-2 & H818-2) and then remove the starter motor.

② Pull the starter solenoid from the electric bracket.

9) Rectifier

① Remove the rectifier fitting bolt (H625-2) and then remove the rectifier.

10) Carburetor

① Remove the carburetor fitting bolt (H6100-2) and then remove the carburetor together with the air silencer, insulator and gaskets.

11) Fuel pump

① Remove the fuel pump fitting bolt (H625-2) and then remove the fuel pump.

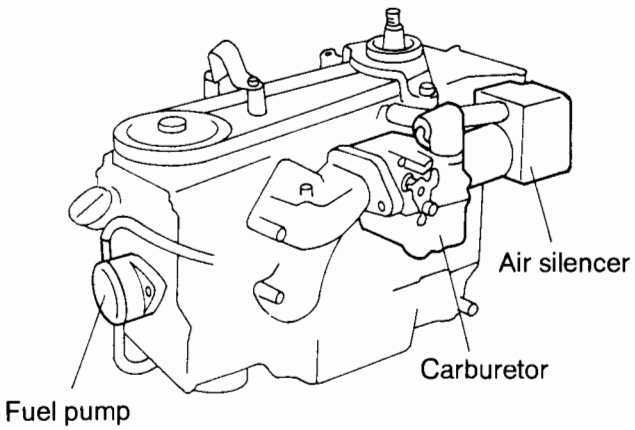

4. Disassembling Engine

Disassemble the engine according to the illustrations provided by mechanisms.

1) Cylinder head, valves and related parts
2) Crank shaft, pistons, cylinder/crank case and related parts
3) Cam shaft, oil pump and related parts

1) Cylinder head, valves and relating parts

NO	Part name	Check point, etc.
	Gasket & O-ring	Note: Must be replaced by new parts whenever they are once removed for disassembling.
1	Cylinder head	● Carbon deposit in combustion chamber ● Surface width and roughness between valve seat and valve ● Scratch or distortion
2	Intake valve Exhaust valve	●Surface width and roughness between valve seat and intake/exhaust valve ●Carbon deposit
3	Valve stem seal – IN Valve stem seal – EX	Black color: Wear of contact surface with valve stem Green color: Wear of contact surface with valve stem
4	Valve spring	● Weekness
5	Rocker arm	●Wear of three contact points: contact surface with cam, rocker arm shaft and rocker arm washer.
6	Rocker arm shaft	● Wear of contact surface with rocker arm

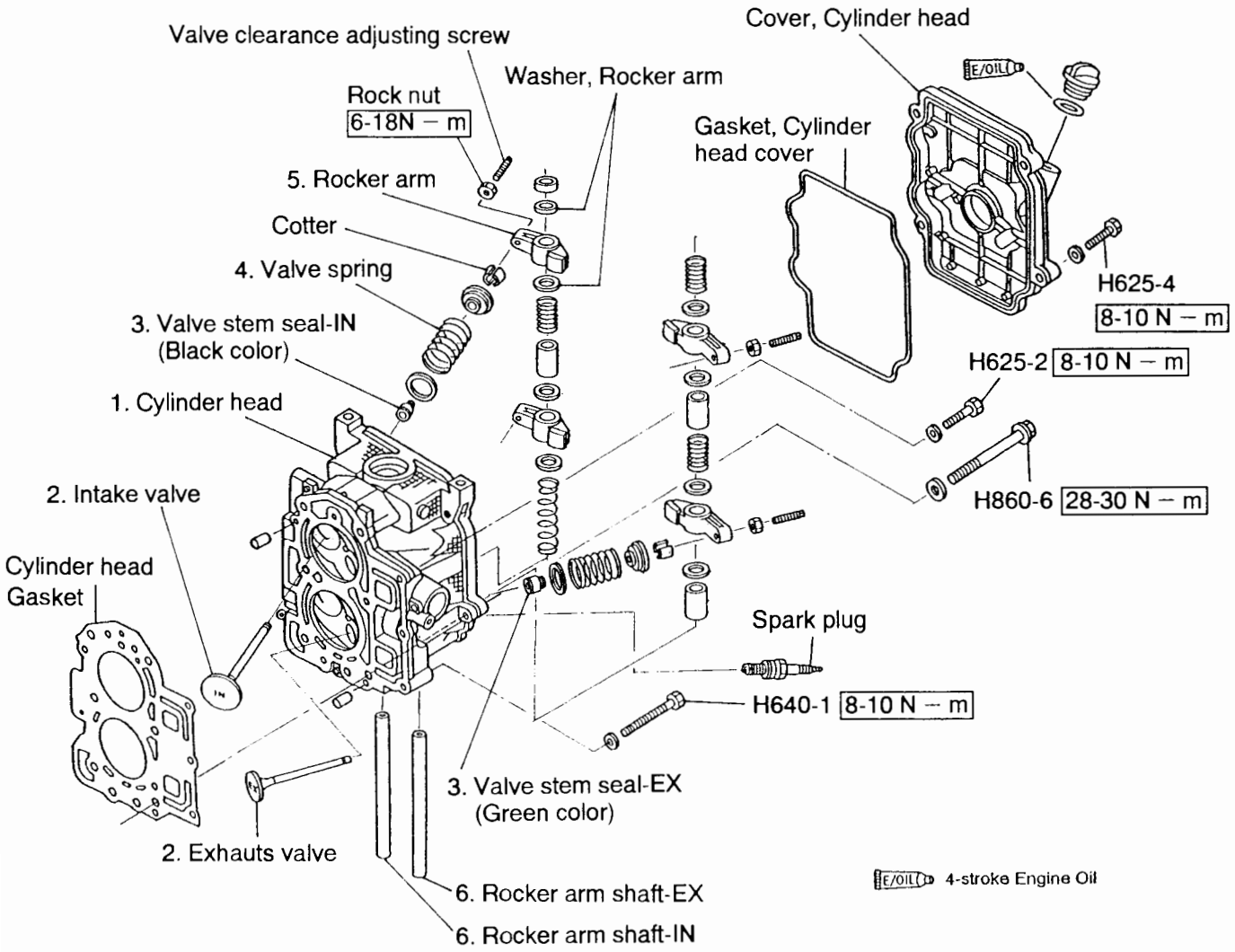

2) Crank shaft, pistons, cylinder/crank case and related parts

NO.	Part name	Check point, etc.
1	Crankshaft	● Oil clearance at main bearings ● Oil clearance at big end of connecting rod Note: Align the tab of the metal bearing with the notch in the cylinder/crank case Note: There are two type of metal bearings (Thickness code: Black color and Brown color)
2	Connecting rod	Note: Pay attention to the connecting rod orientation for reassembling ("UP" mark must face the magneto side)
3	Connecting rod cap	Note: Mate the markings of the cap and connecting rod with each other ("UP" mark must face the magneto side)
4	Connecting rod bolt	Note: Tighten the bolts in careful manner; Gradually tighten the two bolts alternately several times so that they are evenly tightened.
5	Piston	Note: Pay attention to the piston direction ("UP" mark faces the magneto side)
6	Piston pin clip	Note: Don't use the clip that is once removed. Be sure to use a new part for reassembling.

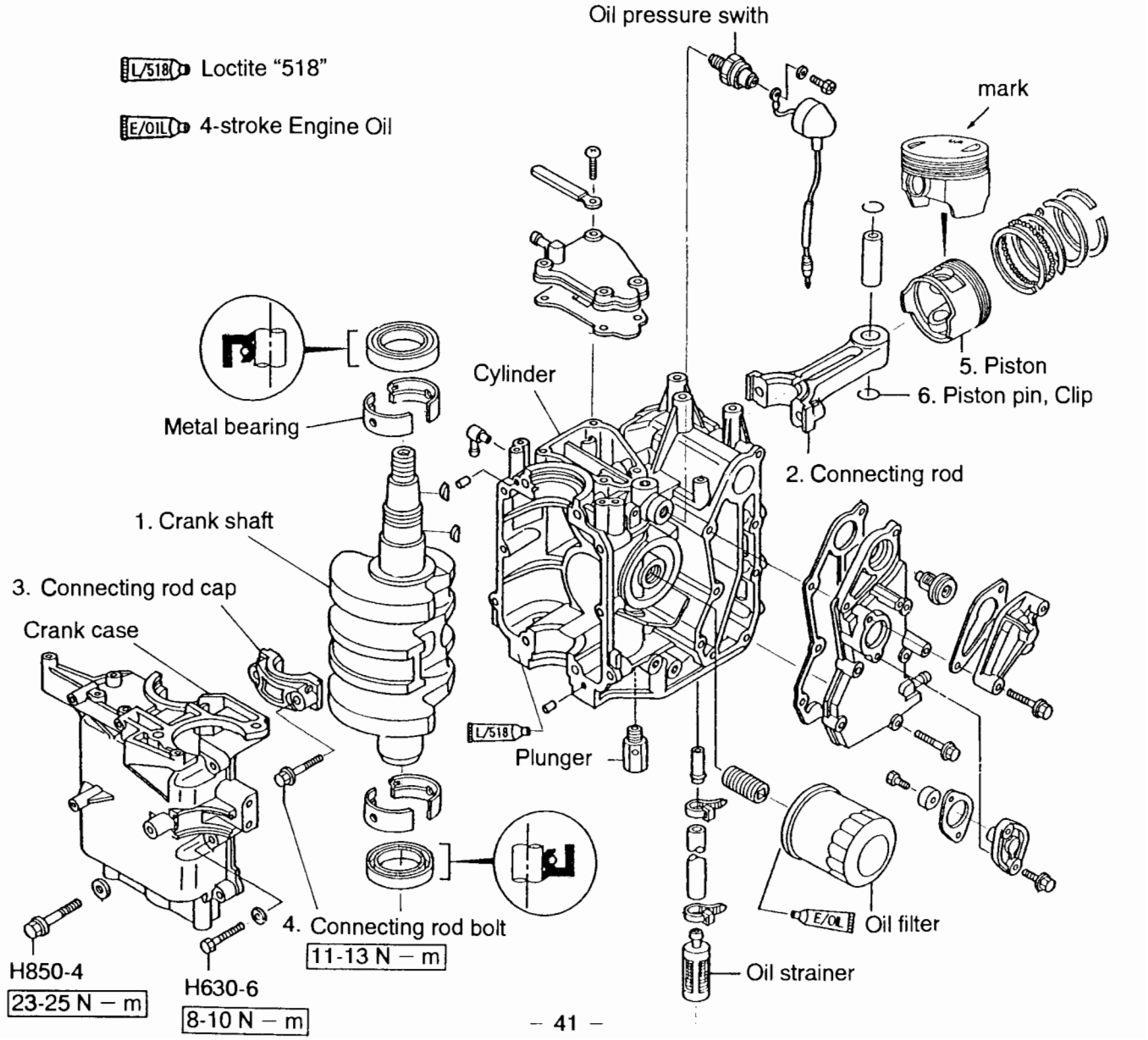

3) Cam shaft, oil pump and related parts

NO.	Part name	Check point, etc.
1	Cam shaft	● Smooth movement of decompressor weight Note: This part is very weak against impact.
2	Timing belt	Note: Be sure to keep clean free from oil and grease
3	Drive pulley	Note: Be sure to keep clean free from oil and grease Note: Pay attention of direction ("UP" mark faces the magneto side)
4	Driven pulley	Note: Be sure to keep clean free from oil and grease Note: Pay attention of direction ("UP" mark faces the magneto side)
5	Oil pump	

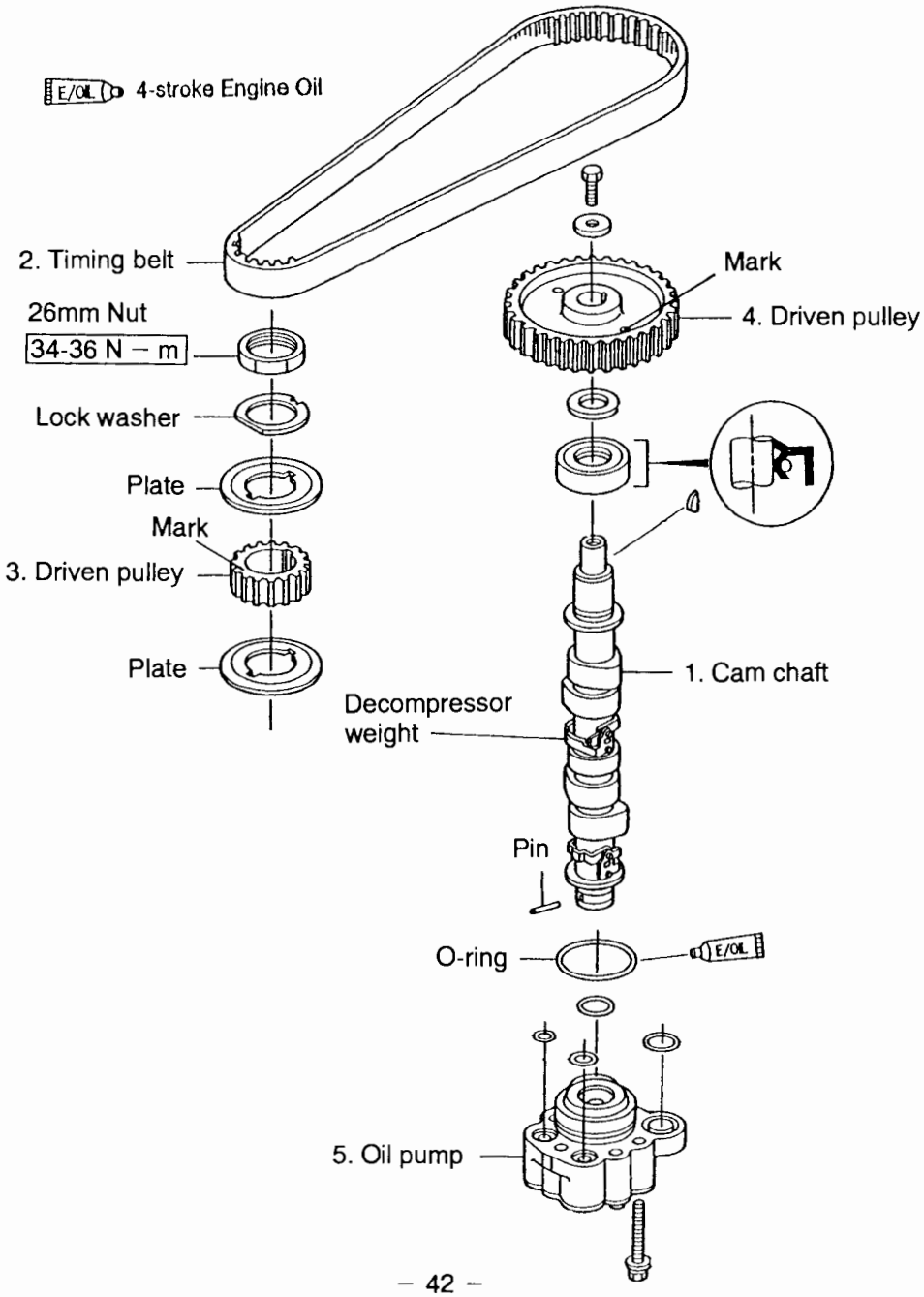

5. Inspection and Measurement of Engine Parts

1) Measurement with vernier calipers

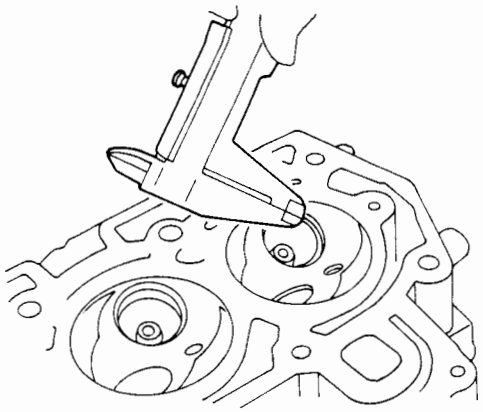

● Valve seat width

Standard value	Out of the limit to use
1.0 mm 0.0393 in	If 2.0 mm (0.079 in) or more, it needs replacement or repair.

● Valve spring free length

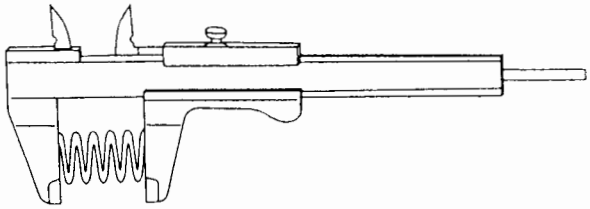

Standard value	Out of the limit to use
35 mm 1.38 in	If 33.5 mm (1.319 in) or less, it needs replacement.

2) Measurement with micrometer

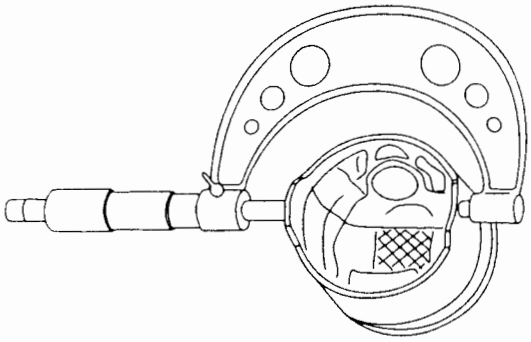

● Outer diameter of piston skirt

Standard value	Out of the limit to use
58.960 mm 2.3213 in	If 58.90 mm (2.3189 in) or less, it needs replacement.

● Piston clearance (Clearance between piston and cylinder)

Standard value	Out of the limit to use
0.020 – 0.055 mm 0.0008 – 0.0022 in	If 0.15 mm (0.0059 in) or more, it needs replacement.

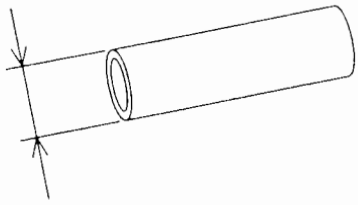

● Outer diameter of piston pin

Standard value	Out of the limit to use
16.00 mm 0.6299 in	If 15.97 mm (0.629 in) or less, it needs replacement.

● Outer diameter of crank pin

Standard value	Out of the limit to use
29.98 mm 1.1803 in	If 29.95 mm (1.179 in) or less, it needs replacement.

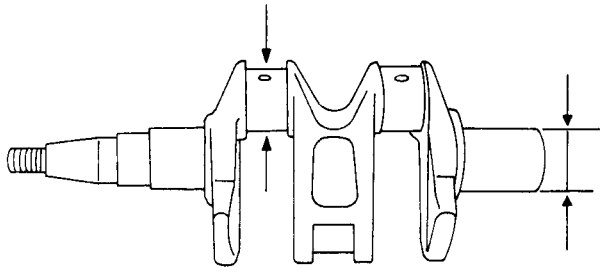

● Outer diameter of crank shaft in metal bearing

Standard value	Out of the limit to use
31.99 mm 1.2594 in	If 31.97 mm (1.259 in) or less, it needs replacement.

● Cam shaft

	Standard value	Out of the limit to use
Outer dia. in bearing (Upper)	17.98 mm 0.708 in	If 17.95 mm (0.707 in) or less, it needs replacement.
Outer dia. in bearing (Lower)	15.97 mm 0.629 in	If 15.95 mm (0.628 in) or less, it needs replacement.
Cam height IN & EX	23.90 mm 0.94 in	If 23.75 mm (0.935 in) or less, it needs replacement.

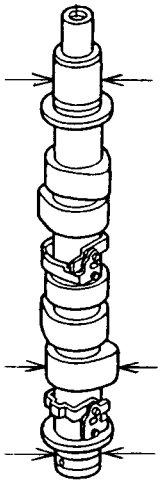

● Valve stem

	Standard value	Out of the limit to use
IN	5.48 mm 0.216 in	If 5.46 mm (0.215 in) or less, it needs replacement.
EX	5.46 mm 0.215 in	If 5.44 mm (0.214 in) or less, it needs replacement.

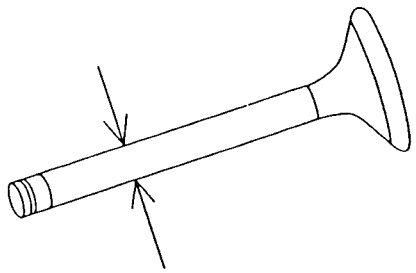

● Clearance between valve guide and valve stem

	Standard value	Out of the limit to use
IN	0.008 – 0.04 mm 0.003 – 0.0016 in	If 0.07 mm (0.0028 in) or more, it needs replacement.
EX	0.025 – 0.057 mm 0.0010 – 0.0022 in	If 0.10 mm (0.004 in) or more, it needs replacement.

● Outer diameter of rocker arm shaft

Standard value	Out of the limit to use
12.99 mm 0.511 in	If 12.94 mm (0.509 in) or less, it needs replacement.

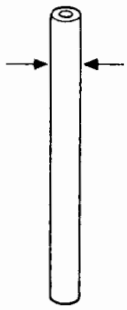

3) Measurement with cylinder gauge

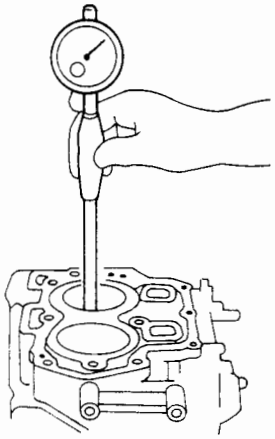

● Inner diameter of cylinder

Standard value	Out of the limit to use
59.00 mm 2.3228 in	If 59.06 mm (2.3252 in) or more, it needs replacement.

● Diameter of piston pin hole

Standard value	Out of the limit to use
16.002 mm 0.630 in	Depends on clearance between pin and hole.

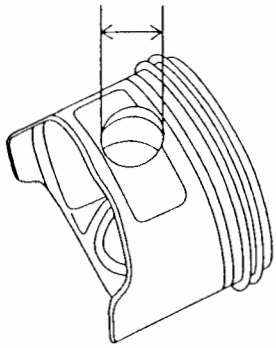

● Clearance between piston pin and piston pin hole

Standard value	Out of the limit to use
0.002 – 0.012 mm 0.00008 – 0.0005 in	If 0.04 mm (0.0016 in) or more, it needs replacement.

● Oil clearance at big end of connecting rod

Standard value	Out of the limit to use
0.015 – 0.041 mm 0.0006 – 0.0016 in	If 0.060 mm (0.002 in) or more, it needs replacement.

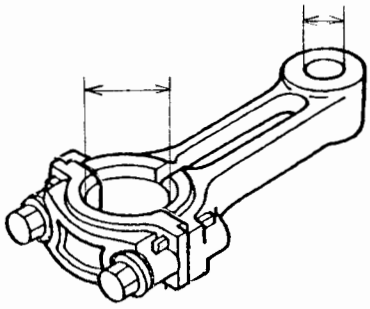

● Inner diameter of small end of connecting rod

Standard value	Out of the limit to use
16.01 mm 0.630 in	If 16.04 mm (0.631 in) or more, it needs replacement.

● Inner diameter of rocker arm

Standard value	Out of the limit to use
13.01 mm 0.512 in	If 13.05 mm (0.514 in) or more, it needs replacement.

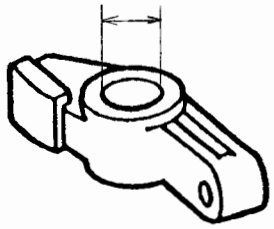

● Oil clearance between rocker arm and shaft

Standard value	Out of the limit to use
0.006 mm – 0.035 mm 0.00024 – 0.00138 in	If 0.06 mm (0.0024 in) or more, it needs replacement.

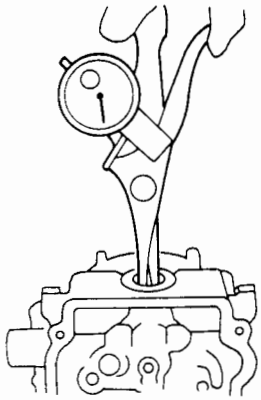

● Inner diameter (bearing) of cam shaft holder

	Standard value
Upper (Cylinder head)	18.01-18.025 mm 0.709 – 0.710 in
Lower (Oil pump)	

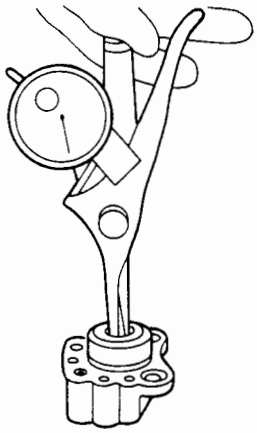

● Oil clearance between cam shaft and holder

	Standard value	Out of the limit to use
Upper	0.02 – 0.05 mm 0.0008 – 0.0020 in	0.09 mm (0.0035 in) or more
Lower	0.02 – 0.05 mm 0.0008 – 0.0020 in	0.09 mm (0.0035 in) or more

If the oil clearance is out of the limit, replace cylinder head and/or cam shaft and/or oil pump.

● Inner diameter of valve guide

	Standard value	Out of the limit to use
IN	5.51 mm 0.217 in	If 5.55 mm (0.218 in) or more, it needs replacement.
EX	5.51 mm 0.217 in	If 5.57 mm (0.219 in) or more, it needs replacement.

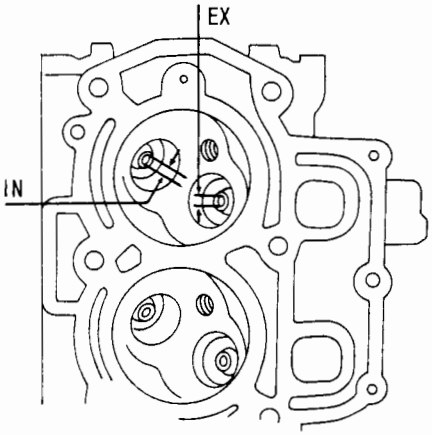

4) Measurement with thickness gauge

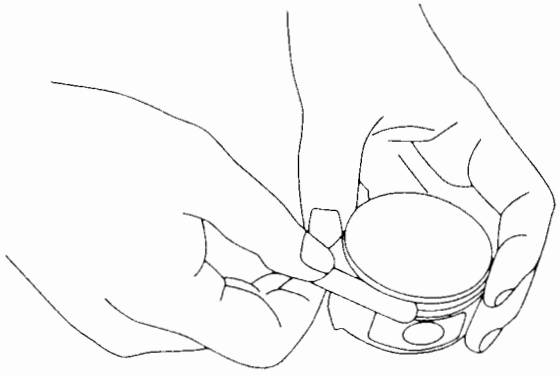

● Clearance between piston ring and ring groove

	Standard value	Out of the limit to use
Top	0.04 – 0.08 mm 0.0016 – 0.0031 in	If 0.10 mm (0.004 in) or more, it needs replacement.
Second	0.03 – 0.07 mm 0.0012 – 0.0028 in	If 0.09 mm (0.0035 in) or more, it needs replacement.
Oil	0.01 – 0.18 mm 0.0004 – 0.0071 in	If 0.21 mm (0.0083 in) or more, it needs replacement.

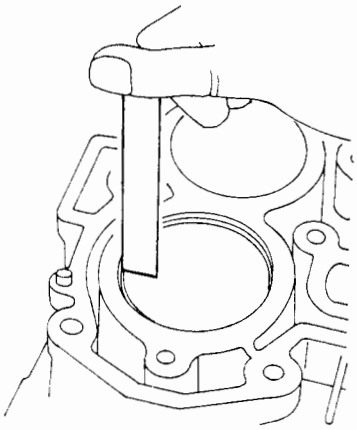

● Piston ring end gap

	Standard value	Out of the limit to use
Top	0.15 – 0:35 mm 0.006 – 0.014 in	If 0.5 mm (0.020 in) or more, it needs replacement.
Second	0.30 – 0.50 mm 0.012 – 0.020 in	If 0.7 mm (0.028 in) or more, it needs replacement.
Oil	0.20 – 0.70 mm 0.008 – 0.028 in	

Note:
- Set the piston ring by pressing it in the piston crown side.
- To be replaced with a new oil ring when replacing with new top and/or second rings.

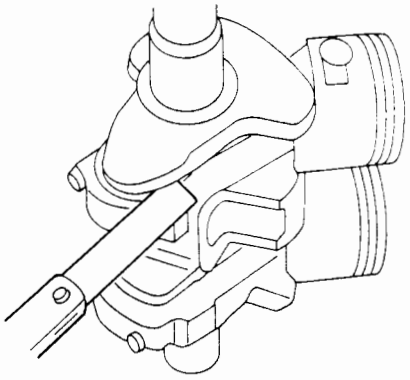

● Side clearance at big end of connecting rod

Standard value	Out of the limit to use
0.1 – 0.25 mm 0.004 – 0.01 in	If 0.6 mm (0.024 in) or more, it needs replacement.

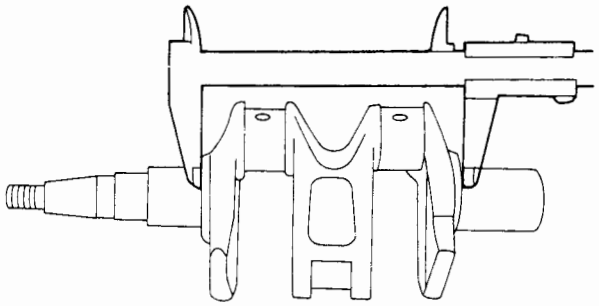

● Side clearance of crankshaft

Standard value	Out of the limit to use
0.1 – 0.3 mm 0.004 – 0.012 in	0.6 mm (0.024 in) more

If the side clearance is out of the limit, measure length of the crankcase (cylinder side) and the crankshaft and replace crankshaft and/or cylinder-crankcase ass'y.

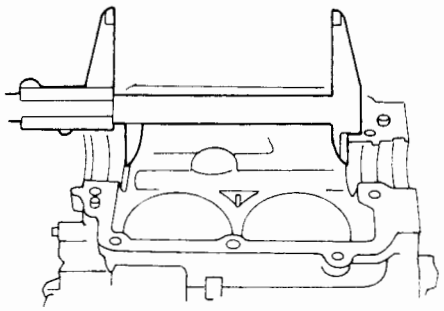

	Standard value
Crankshaft length	126.8 – 126.9 mm 4.992 – 4.996 in
Crankcase length	127.0 – 127.1 mm 5.000 – 5.004 in

5) Measurement with Plastigage®

● Oil clearance between crankshaft and metal bearing

1) Wipe oil out of:
- Crankshaft bearing journals
- Metal bearings (both sides)
- Bearing portions of cylinder and crankcase

2) Install metal bearings into the cylinder and crankcase.

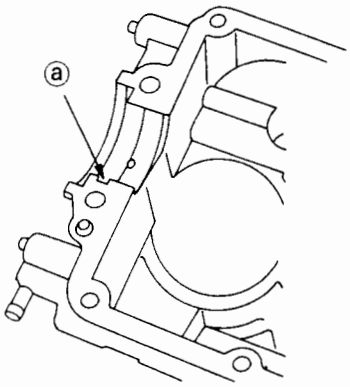

Note:
Align the tab of the bearing with the notch ⓐ in the cylinder and crankcase.

3) Install the crankshaft to cylinder.
4) Place a piece of the plastigage on the crankshaft main bearing journal.
5) Assenble the crankcase.
Tighten the crankcase bolts to the specified torque in the indicated order.
Torque: H850: 23-25 N – m (2.3-2.5 kg – m)
(17-18 lb – ft)
H630: 8-10 N – m (0.8-1.0 kg – m)
(5.8-7.2 lb – ft)

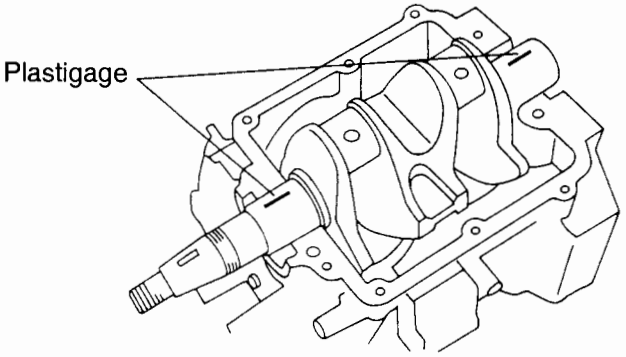

Note:
Do not crank up the crankshaft.

6) Disassemble the crankcase.
7) Measure the compressed plastigage width at its widest point.

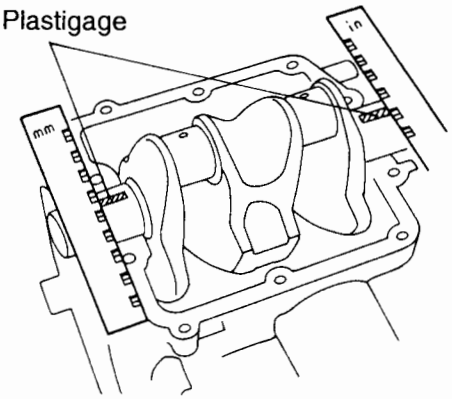

Standard value	Out of the limit to use
0.012 – 0.044 mm 0.0005 – 0.0017 in	0.06 mm (0.002 in) or less

If the oil clearance is out of the limit, measure inside diameter of the cylinder/crankcase bearing holders and the crankshaft bearing journals. There are within the standard value, replace metal bearings.

● Cylinder/Crankcase bearing holder inside diameter code
The codes (2 sort) are stamped on the upper side of the crankcase.

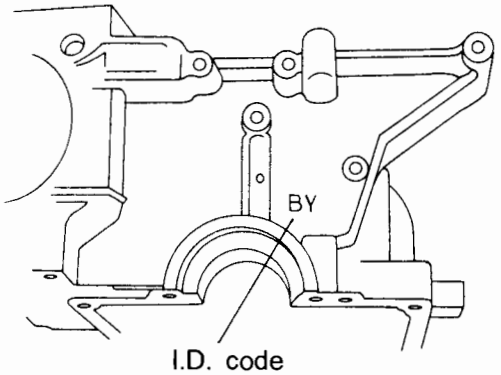

I.D. code	Standard value	Appling metal bearing
A, X	35.000 – 35.008 mm 1.3780 – 1.3783 in	Brown color paint
B, Y	35.008 – 35.016 mm 1.3783 – 1.3786 in	Black color paint

Remark: I.D. code A and B — For upper bearing holder
I.D. code X and X — For lower bearing holder

● Metel bearing thickness code

The codes are painted on the side of the bearing.

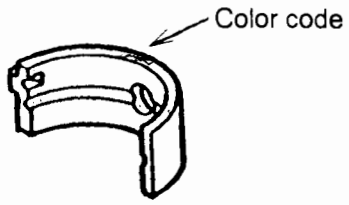

Color code	Thickness
Brown	1.488 – 1.494 mm 0.0586 – 0.0588 in
Black	1.494- – 1.500 mm 0.0588 – 0.0590 in

● Oil clearance at big end of connecting rod

1) Wipe oil out of the crank pin and big end bearing of connecting rod.
2) Set the Plastigage to the crank pin and fit it to the connecting rod. Tighten the bolt with the specified torque.

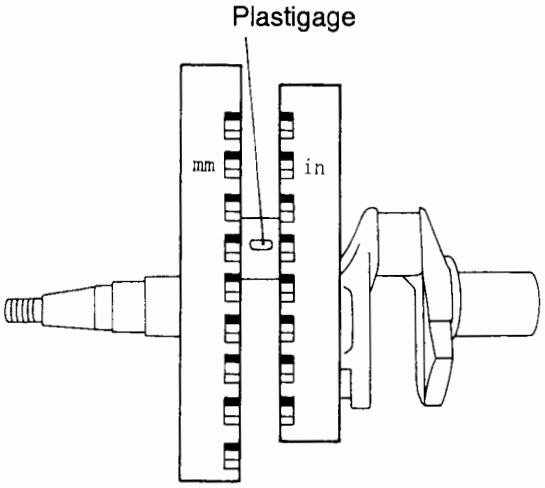

Tightening torque: 11-13 N – m (1.1-1.3 kg – m)
(8.0-9.4 lb – ft)

Note:
Do not turn the connecting rod.

3) Remove the connecting rod and check the Plastigage reading.

Standard value	Out of the limit to use
0.015 – 0.041 mm 0.0006 – 0.0016 in	If 0.06 mm (0.002 in) or less, it needs replacement

6) Measurement with pressure gauge

● Oil pump

1) Remove the oil pressure switch first. Next, set a pressure gauge attachment and a pressure gauge capable of reading 0 – 1.0 MPa (0 – 10 kg/cm², 0 – 142 psi).

2) Start the engine and measure oil pressure at the oil temperature of 75 ℃ (167 °F).

Engine speed	Oil pressure at 75 ℃ (167 °F) of oil temperature
1,000 rpm	0.03 MPa (0.3 kg/cm², 4.3 psi) or more
5,000 rpm	0.15 MPa (1.5 kg/cm², 21 psi) or more

3) If the oil pressure is lower than the requirement, check the oil pump system.

7) Other inspections

● Clearance of ball bearing

Wash the bearing and dry it. While turning the bearing by hand, check to see if the clearance is normal, there is neither noise nor scratch. If there is something wrong in the bearing, replace it with new one.

● Oil seal and O-ring

Check to see cut, nicked and wearing, replace it with new one.

6. Repair and Replacement of Engine Parts

● Repair of valve seat

1) Plane the valve seat face with the 45° valve seat cutter.

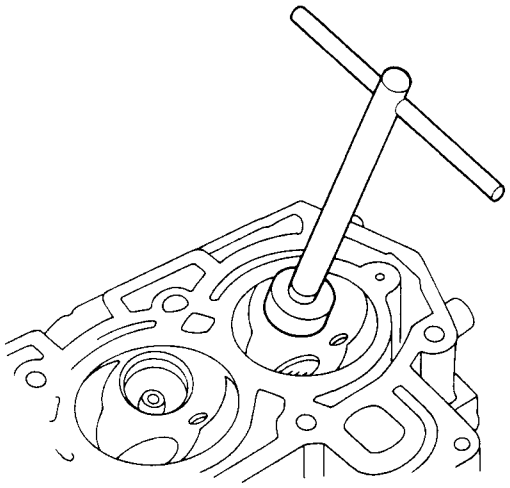

2) Depending on the situation (the contact position of the seat is too high or too low), use the 30° cutter or 60° cutter and then repair the surface area with the 45° cutter.

3) Apply Prussian Blue compound (or equivalent) evenly on the seat face. While turning the valve with the valve lapper, check face width between the valve and valve seat. If necessary, repair the face width with the valve seat cutter.

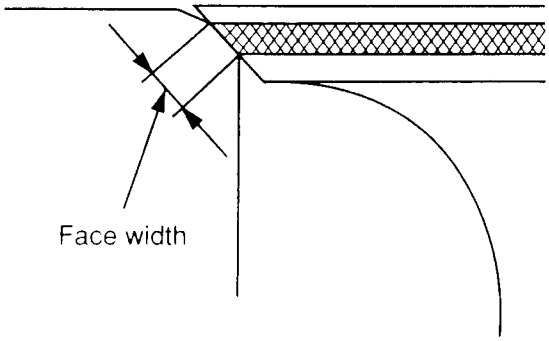

	Standard value	Limit that needs repair
IN	1.0 mm 0.04 in	2.0 mm or more 0.08 in
EX	1.0 mm 0.04 in	2.0 mm or more 0.08 in

4) After repair of the valve seat, lap the valve for good fitting.
Apply lapping compound thinly on the seat and lap the valve while turning and tapping it with the valve lapper.

Remarks: Since the lapping compound is supplied in a set of three grades (coarse, medium and fine), lap the valve with all of them in order from coarse, medium and fine.

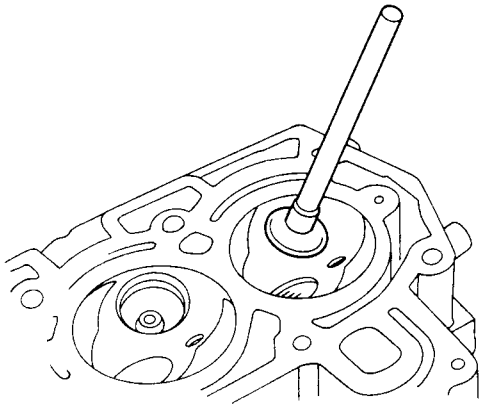

Notes:

- When using lapping compound of a different grade, completely wipe out the previously used compound beforehand.
- After lapping is complete, wash the valve and valve seat after completely wiping the compound out of them.

7. Reassembling Engine

Reassemble the engine in the reverse order of disassembling with careful attention to the following points.

(1) Cylinder head and related parts

● Valve stem seal

- There are two kinds of valve stem seals, namely, the valve stem seal for the intake valve is identified by the black color while the other for the exhaust valve is identified by the green color.
- On installing the valve stem seal to the cylinder head, apply the engine oil for the 4-stroke cycle engine to the insertion point. For setting the valve stem seal, press it into the valve guide with fingers.

● Intake valve, Exhaust valve

- The intake valve and exhaust valve are different from each other, namely the intake valve is identified by the "IN" mark while the exhaust valve is identified by the "EX" mark.
- Apply the engine oil for the 4-stroke cycle engine to the valve stem. Then, insert the valve into the valve guide while twisting it.
- After setting the cotter on-to the valve stem, tap the valve shaft end with a small plastic hammer several times for stabilizing the cotter in setting.
- After reassembling the valves, apply the engine oil for the 4-stroke cycle engine to the upper side of the retainer and its periphery.

● Cam shaft

- Carefully press the oil pump pin so that it does not come out of the cam shaft.
- When reassembling the cam shaft to the cylinder head, apply the engine oil for the 4-stroke cycle engine to the cam and bearing beforehand and then insert the cam shaft into the cylinder head from the oil pump side while twisting it with care not to turn over the oil seal lip.

● Rocker arm

- Temporarily set the tappet adjusting screw and tappet adjusting nut to the rocker arm.

> Note:
> Set the tappet adjusting nut with the chamfered side down.

- Apply the engine oil for the 4-stroke cycle engine to the rocker arm shaft.
- Set the rocker arm shaft from the side of the oil pump of the cylinder head. Pay heed to orientation of the rocker arm shaft so that the tapped hole side is positioned in the oil pump side.
- Set the rocker arm shaft spring, washer, rocker arm, rocker arm shaft collar to the rocker arm shaft from the bottom side in this order. (See page 40.)
- When setting the above-mentioned parts, apply the engine oil to every part.

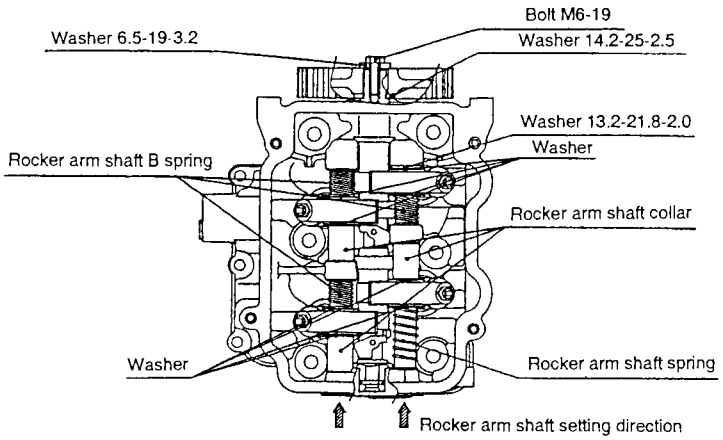

● Oil pump

- Pour the engine oil of approximately 2.0 ml into the oil pump through the inlet and outlet ports.
- Apply the engine oil for the 4-stroke cycle engine to the O-rings (1.5-10.7ø, 1.5-8.5ø, 1.5-15.5ø) and the O-ring at the boss before setting them in the oil pump.
- When assembling the oil pump to the cylinder head, carefully set it so that the cam shaft pin and the notch on the oil pump shaft meet each other.
- Fasten the oil pump with the three M6 bolts with the tightening torque and in the tightening order specified below.

  Tightening order: ①, ② and ③ (Refer to the figure.)

Tightening torque: 5-6 N – m (0.5-0.6 kg – m)

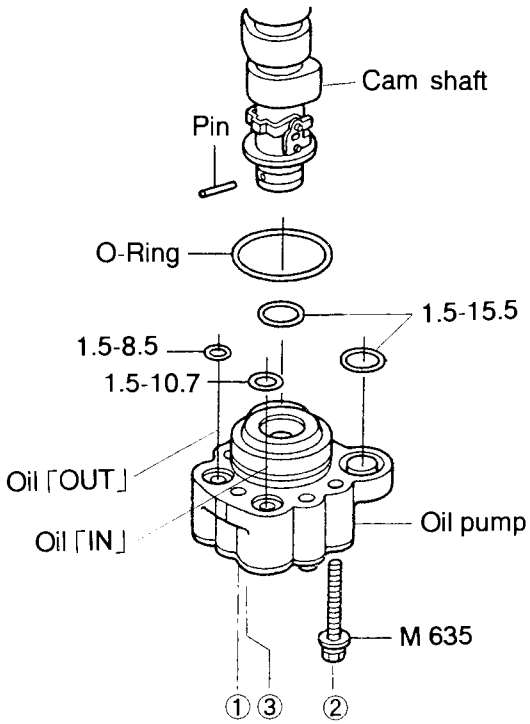

(2) Engine Block

● Plunger

- When setting the plunger stopper into the plunger case, pay attention to the orientation of the plunger stopper so that it is set as shown in the figure.
- When assembling the plunger assembly to the cylinder, fasten it together with the cover.

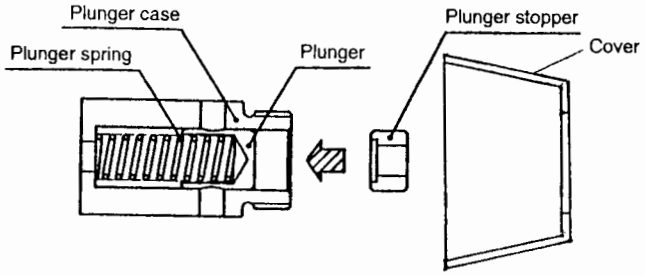

Tightening torque: 19-21 N−m (1.9-2.1 kg−m) (12-15 lb − ft)

● Piston ring

Fitting oil rings to piston

1. Set the spacer expander in the oil ring groove, and check to see if both the ends of it correctly link with each other as shown in the figure. ①
2. While holding down the slit of the spacer expander with a thumb, set the upper rail as its slit is deviated from the slit of the spacer expander at an angle of 90 in the counterclockwise direction. ②
3. In the same manner as the preceding step, set the lower rail as its slit is deviated from the slit of the spacer expander at an angle of 90 in the clockwise direction. ③

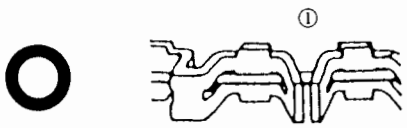

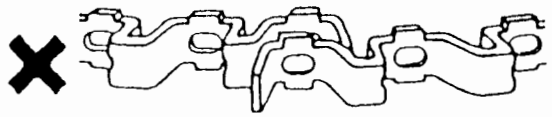

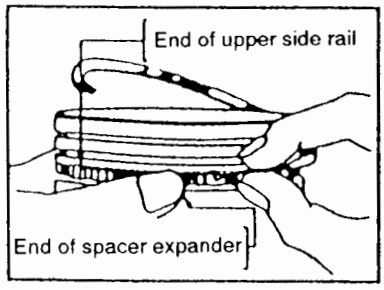

Fitting compression rings to piston

Fit the compression rings onto the piston in the correct order to start with the lower ring. Set each compression ring with the side marked with the brand and size up.

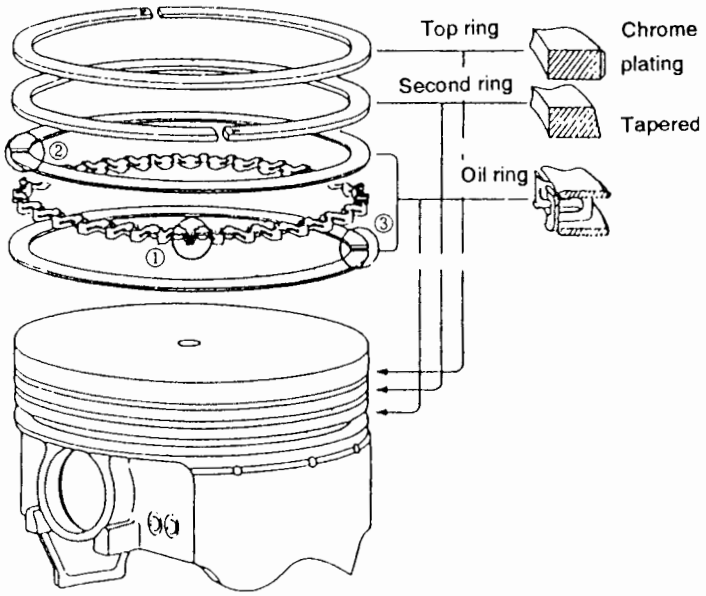

Check of correct setting of each piston ring

1. Check to see if the slit of each piston ring is not set in the piston thrust direction or piston pin direction.
2. After the assembling work is complete, make sure that each piston ring is set as shown in the figure once again.

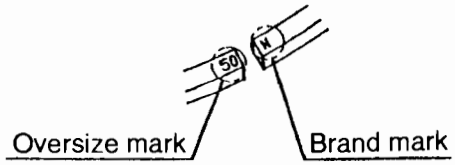

● Piston and Connecting rod

- Assemble the connecting rod and connecting rod cap to each other as they were put together before removing. (Before removing the connecting rod cap, be sure to leave a marking at a mated point between the connecting rod and connecting rod cap as a reference for reassembling.)
- The upper sides of the connecting rod cap, connecting rod and piston are identified by the "UP" mark.
- For inserting the piston and connecting rod assembly into the cylinder, use the piston slider. Apply the engine oil for the 4-stroke cycle engine to the cylinder liner, piston rings before inserting the assembled piston.

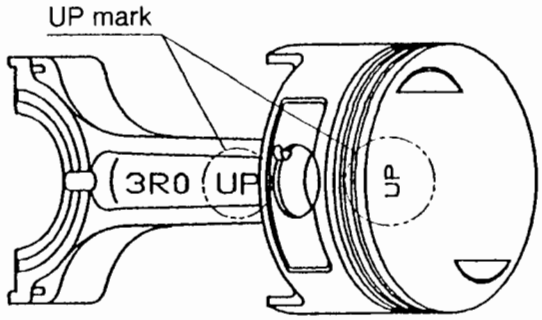

● Cylinder and Crank case

- When fitting the metal bearing to the cylinder and crank case, set the tab in the notch.
- Apply the engine oil for the 4-stroke cycle engine to the metal bearing.
- Degrease the mating surface between the cylinder and crank case.
- Apply the Locktight #518 to either of the cylinder and crank case with careful attention to the applying part and width so as to avoid overflow.

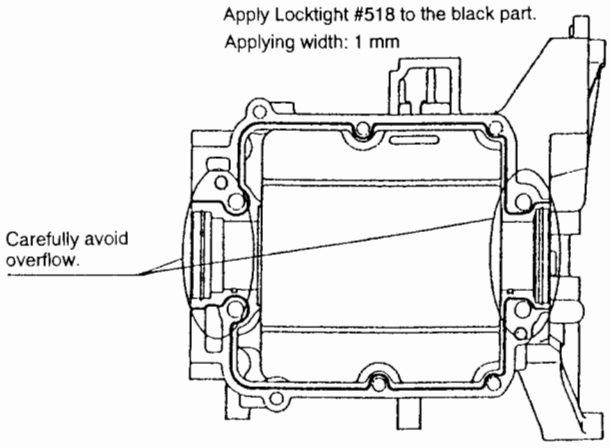

● Fitting cylinder head to cylinder

- Before fitting the cylinder head to the cylinder, set the piston at the top dead center.
- When fastening the cylinder head, carefully tighten the bolts with the specified tightening torque and in the correct order.

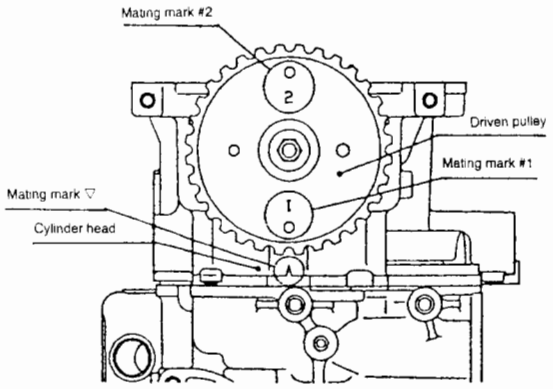

Tightening torque:

M8 bolt: 28-30 N – m (2.8-3.0 kg – m) (20-22 lb – ft)
M6 bolt: 8-10 N – m (0.8-1.0 kg – m) (5.8-7.2 lb – ft)

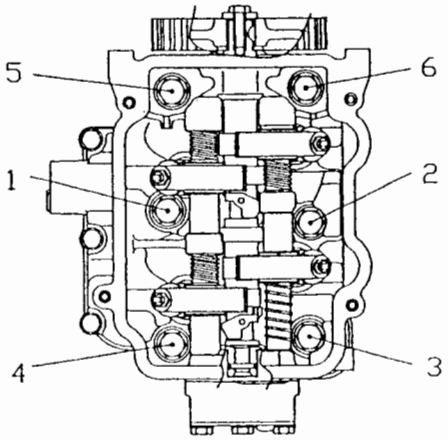

● Cylinder head cover

• Fit the gasket to the cylinder head cover and apply the Three Bond #1207B to the shaded part shown in the figure.

Tightening torque: 8-10 N – m (0.8-1.0 kg – m) (5.8-7.2 lb – ft)

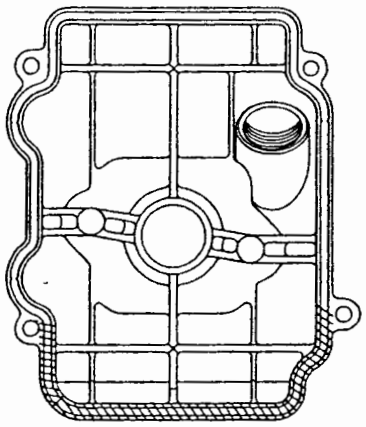

Apply the sealant to the shaded part.
Shaded part (Part shown by slanted lines)

● Fuel pump

• Make sure that the marks "2" and "0" on the driven pulley and the mark " ▽ " on the cylinder head are aligned in a straight line.

• Apply the engine oil for the 4-stroke cycle engine to the top of the plunger and O-ring of the fuel pump.

Tightening torque: 5-6 N – m (0.5-0.6 kg – m) (3.6-4.3 lb – ft)

Crank shaft holder

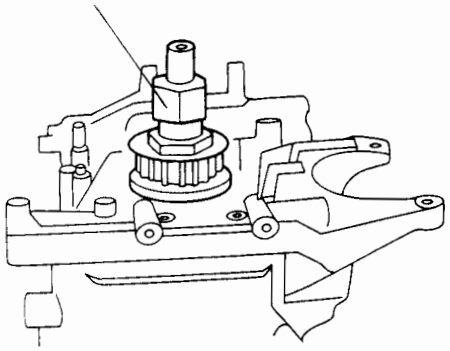

● Oil filter

• Apply the engine oil for the 4-stroke cycle engine to the rubber seal of the oil filter.

Tightening torque: 18 N – m (1.8 kg – m) (13 lb – ft)

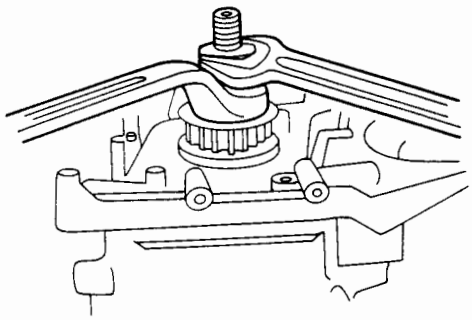

● Drive pulley

• For tightening the nut to fasten the drive pulley, use the crank shaft holder.

Tightening torque: 34-36 N – m (3.4-3.6 kg – m) (25-26 lb – ft)

• After tightening the nut, bend up the lock washer by a part.

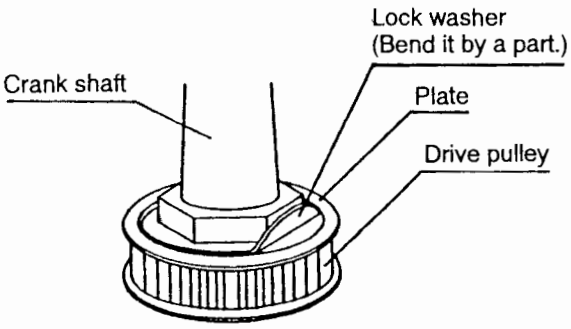

- Electric equipment, Recoil starter, Piping parts

● Flywheel cup

- Degrease the tapered parts of the flywheel cup and crank shaft.

Tightening torque: 70-90 N – m (7-9 kg – m) (51-65 lb – ft)

● Recoil starter and Belt cover

- Respective numbers of bolts, collars and clamps used for the MF model and EP/EF model are different by the model.

● Clamps for wiring and Clips for piping

- Refer to the figures in the following pages (two pages).

- Mounting engine on the lower unit

● Oil strainer

- The angle and direction to install the hose for the oil strainer is as shown in the figure.
- The position to lock the hose band (lead wire 150) is as shown in the figure (to the direction of the arrow mark).

Pay heed to the direction of the band

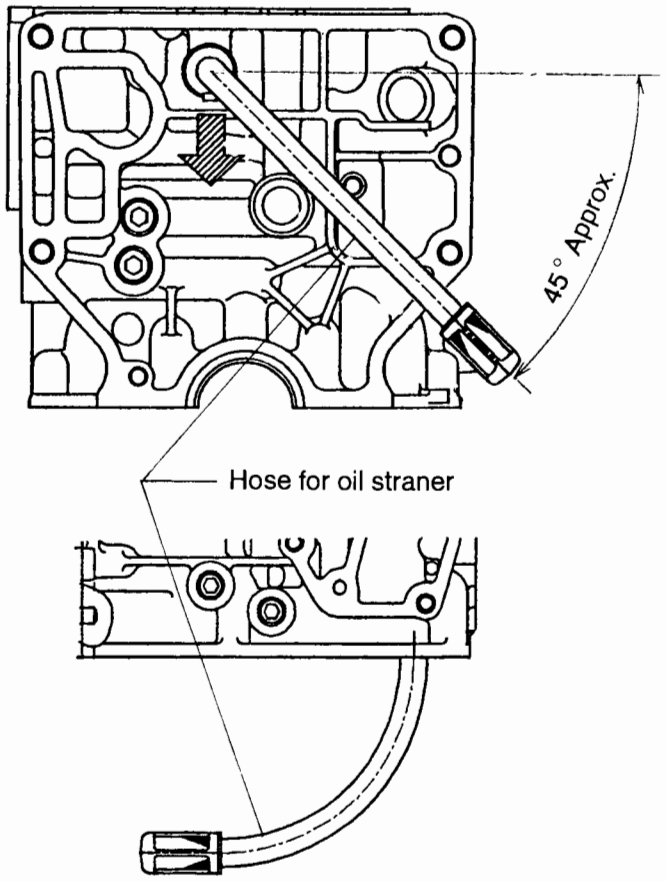

● Mounting engine

- Apply the Teflon grease to the spline of the drive shaft.
- Apply the Three Bond #1207B to the oil pan gasket with care to apply it only to the area specified by the figure.
  Application of the Three Bond is not needed for the gasket coated with a sealant.
- When mounting the engine, pay careful attention to the bent of the hose for the oil strainer and setting position of the oil pan gasket and plate.

Tightening torque: 29-31 N–m (2.9-3.1 kg–m) (21-22 lb – ft)

▨ Apply the sealant to the shaded area (on both sides).

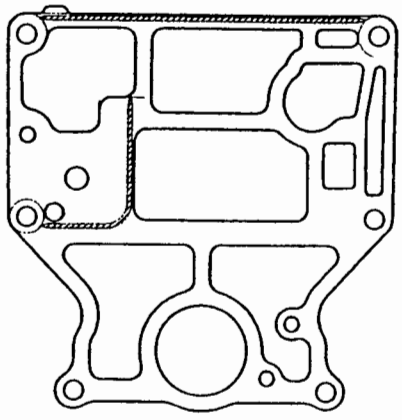

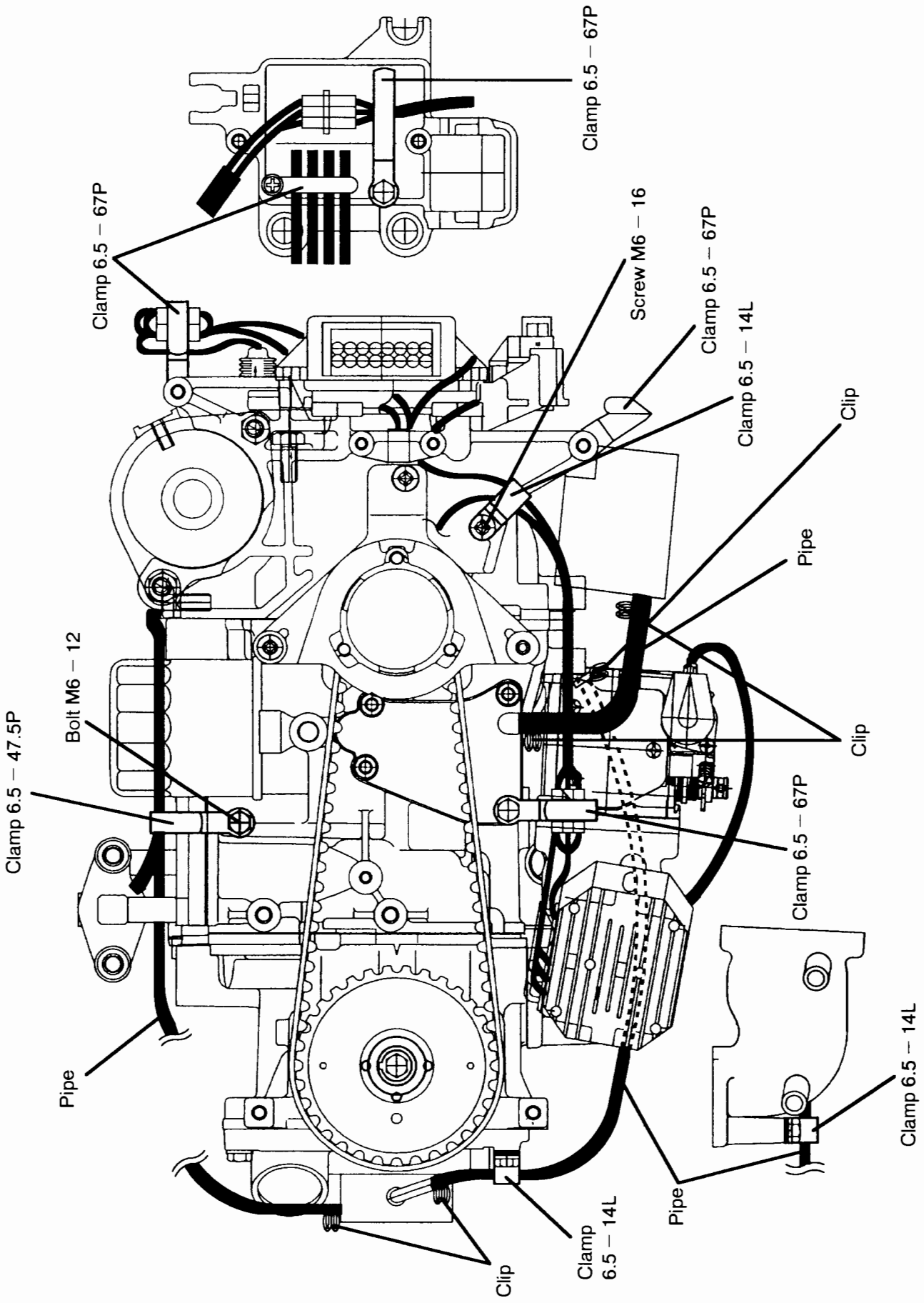
Clamp 6.5 – 67P
Clamp 6.5 – 67P
Screw M6 – 16
Clamp 6.5 – 67P
Clamp 6.5 – 14L
Clip
Pipe
Bolt M6 – 12
Clamp 6.5 – 47.5P
Clip
Clamp 6.5 – 67P
Pipe
Clamp 6.5 – 14L
Pipe
Clamp 6.5 – 14L
Clip

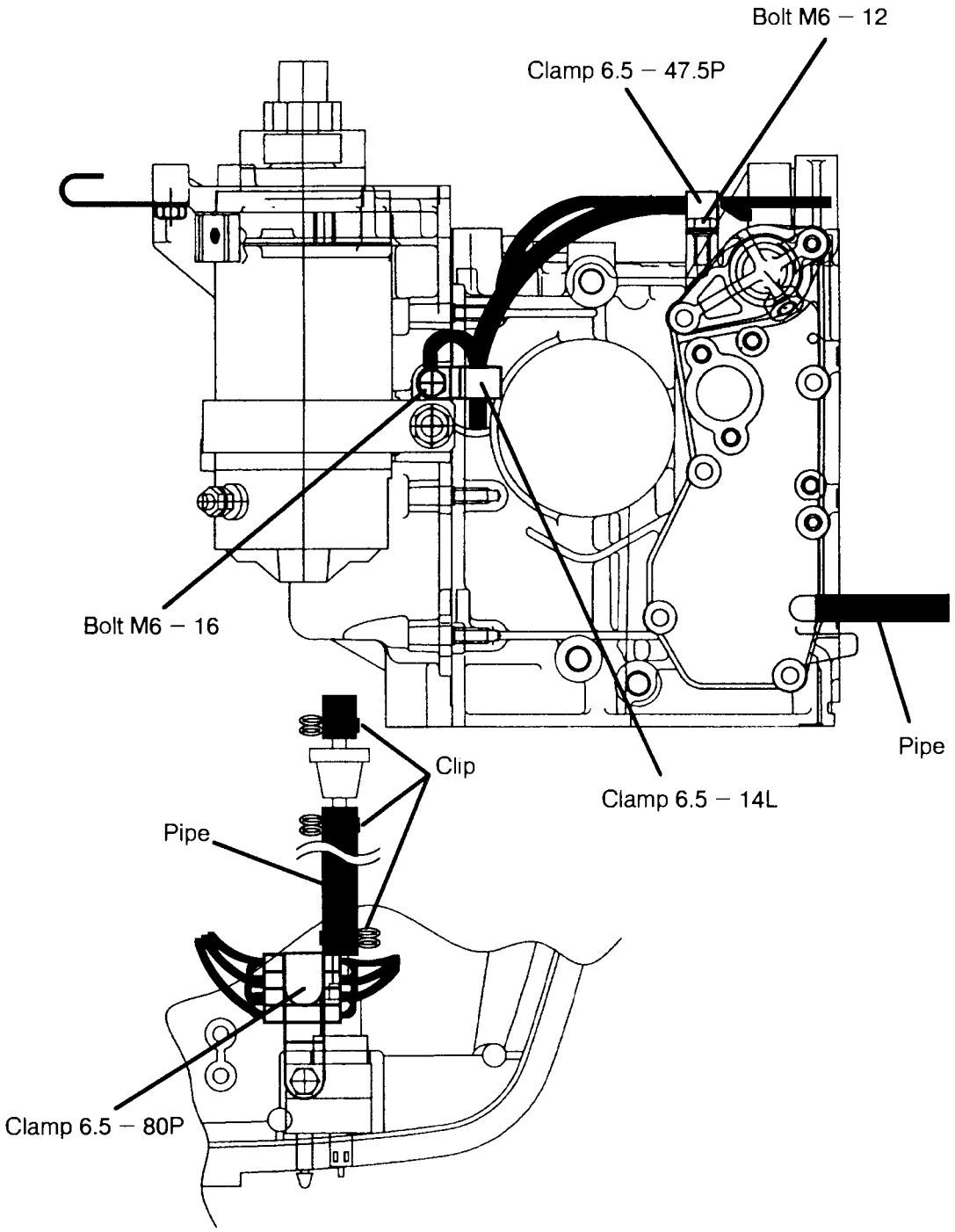
Bolt M6 – 12
Clamp 6.5 – 47.5P
Bolt M6 – 16
Pipe
Clip
Clamp 6.5 – 14L
Pipe
Clamp 6.5 – 80P

● Throttle link

Install and adjust the throttle link in the following order.

① Fully loosen the carburetor stop screw.

② Insert the throttle link into the link drum of the carburetor, and then fit the other end of the throttle link to the pulley.

③ Turn the throttle grip to the full open position.

④ Turn the throttle lever to open the throttle full.

⑤ Securely fasten the throttle link by tightening the screw of the link drum.

In the condition that the throttle is full open, make sure that there is a clearance of approximately 0.5-0.7 mm wide left as shown in the figure.

⑥ After fitting the throttle link, make sure that the throttle valve is full opened or closed.

Note:
For adjusting the idling speed, be sure to warm up the engine before adjusting it with the stop screw.

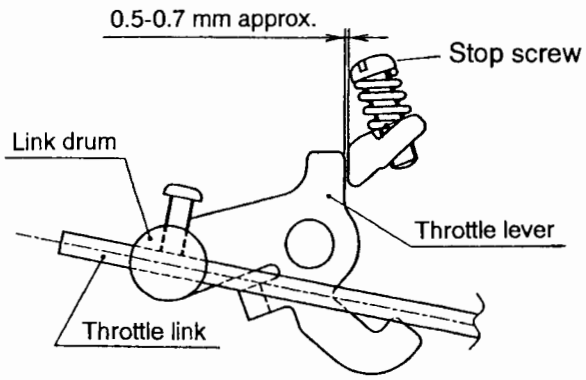

9.9A/15A

1. Gear Housing Removal

⚠ WARNING

To prevent accidental engine starting, remove and isolate) spark plug leads from spark plugs BEFORE removing gear housing.

1. Tilt outboard to full "UP" position.
2. Remove reverse hook guide assembly from lower shift shaft.
3. Loosen jam nut and disconnect coupler. Remove jam nut to allow removal of gearcase.

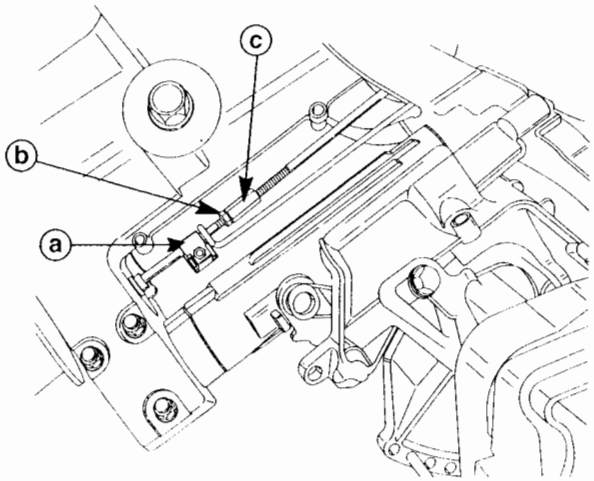

a-Reverse Hook Guide
b-Jam Nut
c-Coupler

4. Remove 3 bolts.

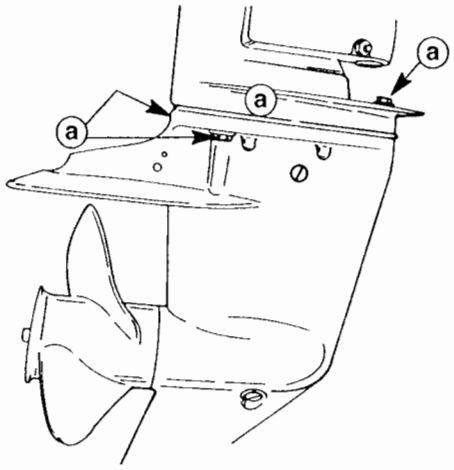

a-Bolts (3)

Gear Housing (Drive Shaft)

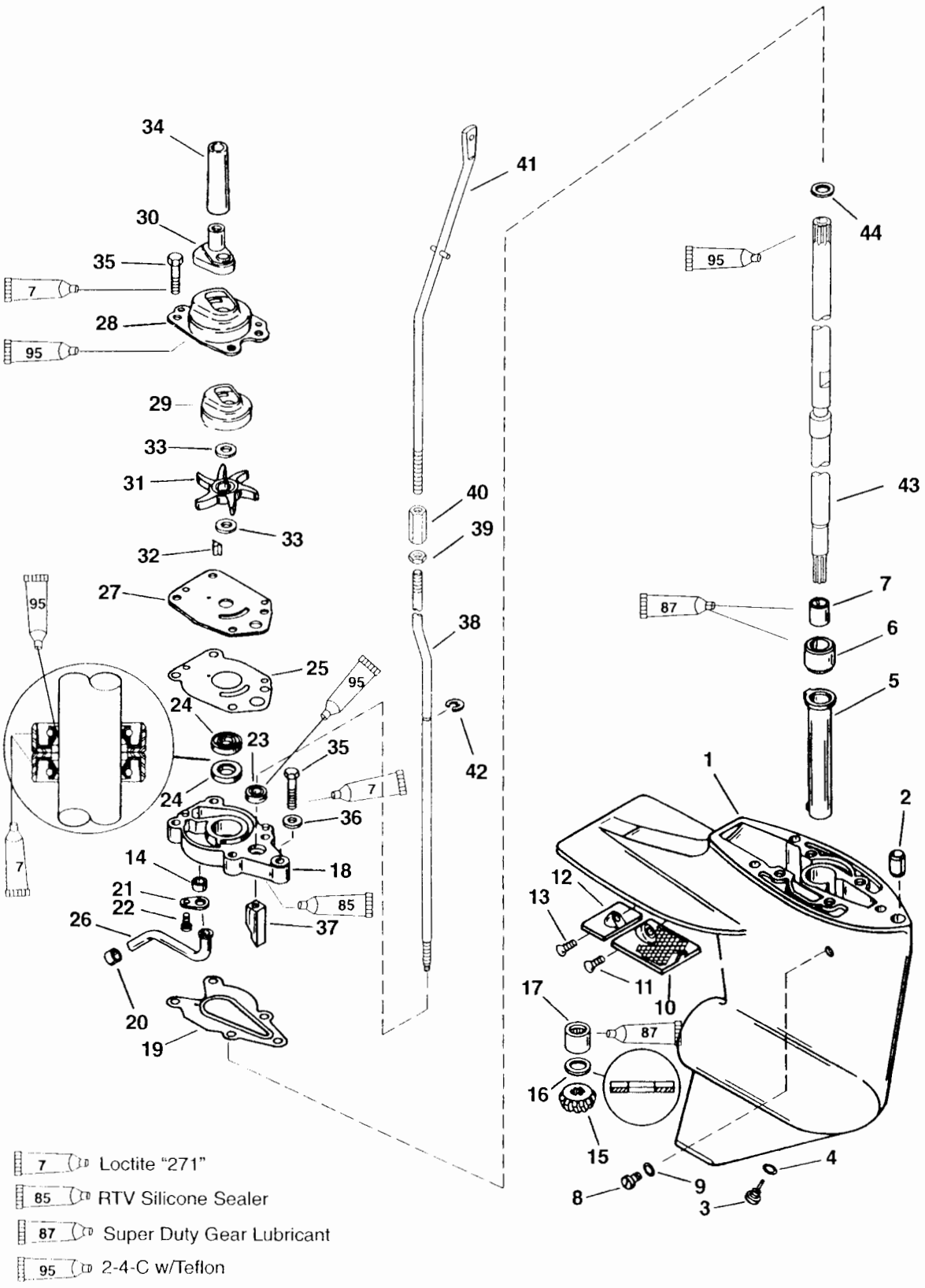

Gear Housing (Propeller Shaft)

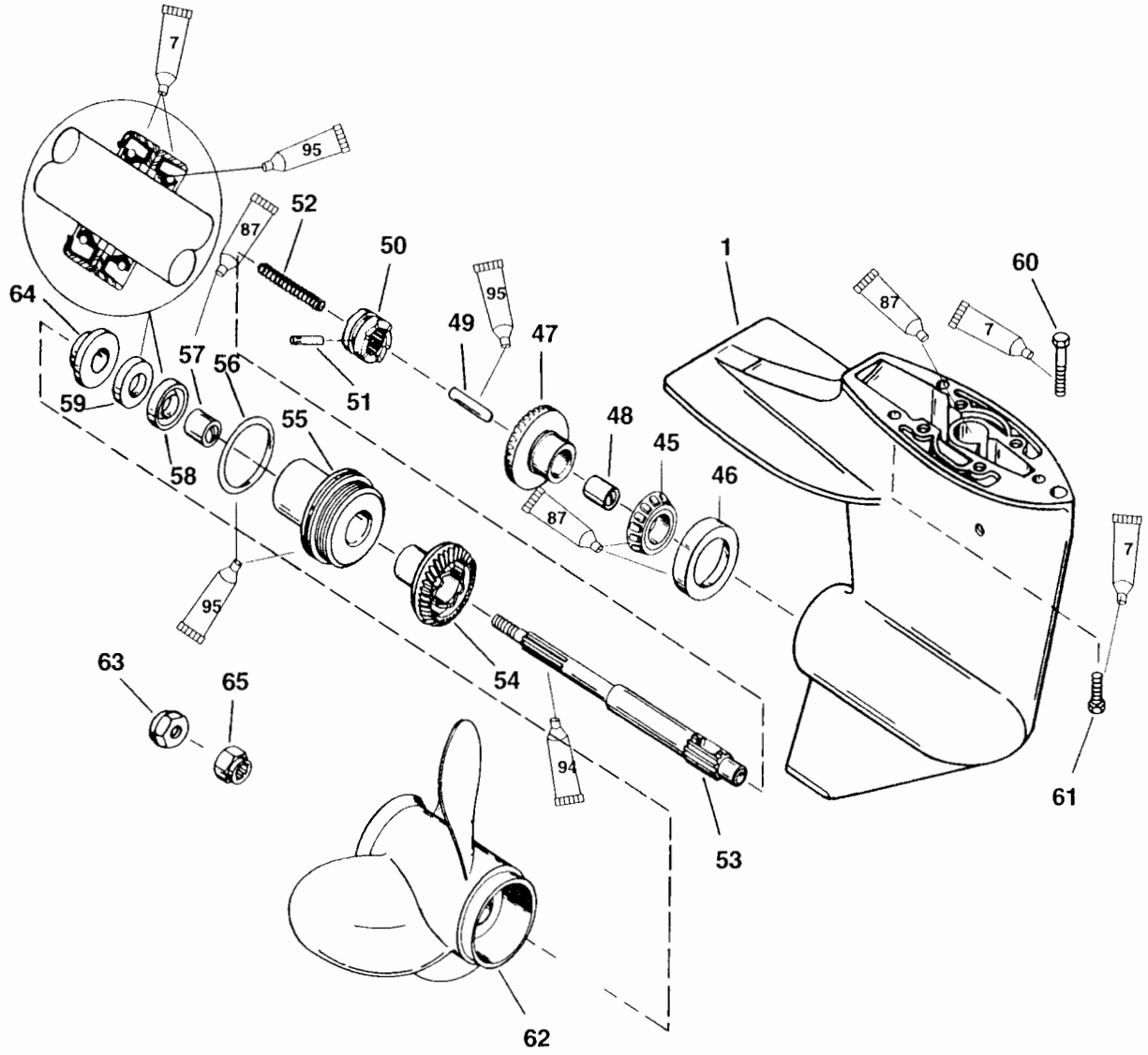

7 Loctite "271"

87 Super Duty Gear Lubricant

94 Anti-Corrosion Grease

95 2-4-C w/Teflon

2. Disassembly

IMPORTANT: It is recommended that, during complete disassembly of gear housing, all O-rings and oil seals be replaced, regardless of their appearance.

Bearing Carrier

1. Remove bearing carrier (LEFT HAND thread) using Bearing Carrier Tool.

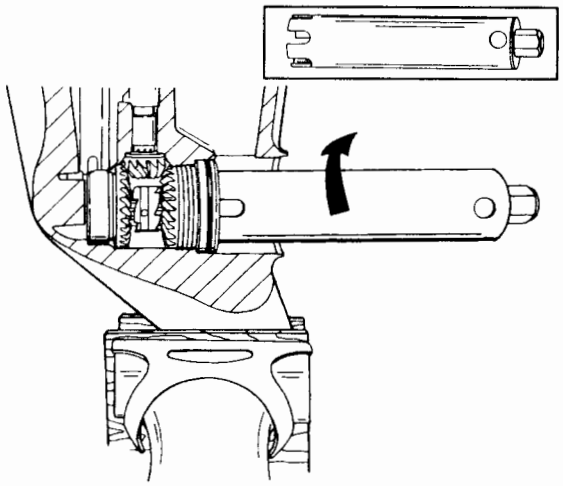

2. Remove carrier and propeller shaft assembly from housing.

Note:
Cam follower is free to slide out of propeller shaft.

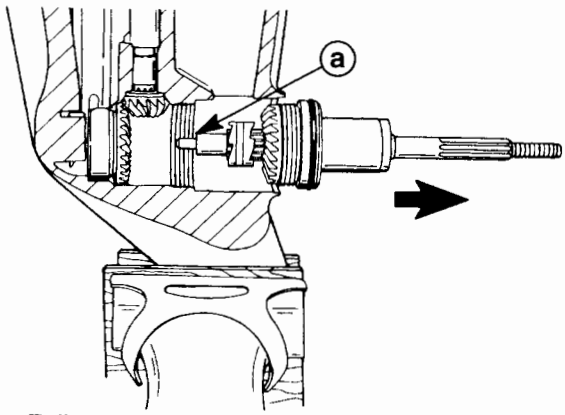

a-Cam Follower

3. Remove propeller shaft and REVERSE gear from bearing carrier.

4. Replace REVERSE gear if gear teeth or clutch teeth are chipped or worn.

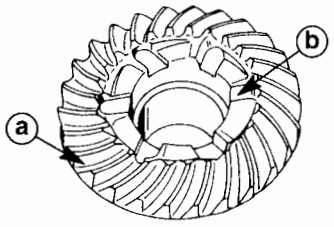

a-Gear Teeth
b-Clutch Teeth

Note:
When using a screwdriver to remove carrier seals, be careful not to scar carrier seal surface. If carrier seal surface is damaged, replace carrier.

5. Using a screwdriver, remove both seals from bearing carrier.

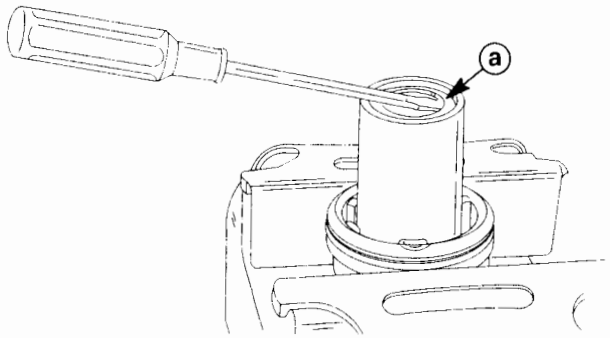

a-Oil Seals

6. Replace bearing carrier bushing if bushing or area on propeller shaft that bushing contacts is pitted or worn. Press bushing from carrier using Bushing Removal Tool.

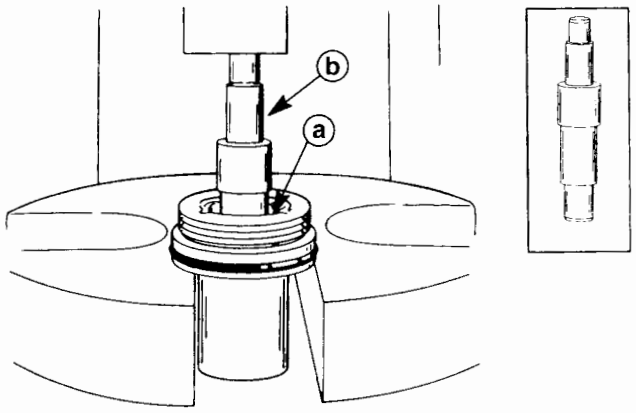

a-Bushing
b-Mandrel

Propeller Shaft

1. Inspect cam follower for wear. If cam follower is worn, replace follower and inspect shift cam for serviceability. Replace cam if worn.

a-Cam Follower

2. Remove groove pin from clutch/propeller shaft applying pressure to side of pin that is NOT grooved. Discard pin.

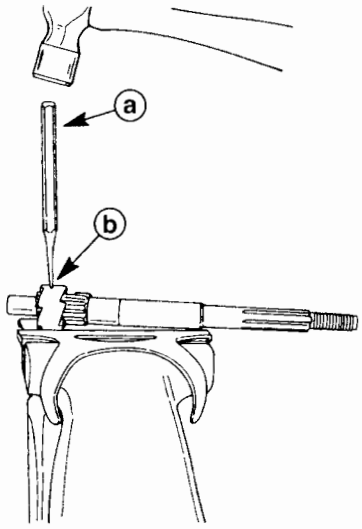

a-Punch
b-Groove Pin (Discard)

3. Remove spring and sliding clutch.

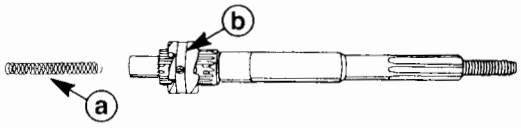

a-Spring
b-Clutch

4. Replace clutch if jaws are rounded or chipped. Rounded jaws may becaused by the following:
   - Improper shift cable adjustment or linkage.
   - Engine idle speed too high while shifting.
   - Shifting too slowly from NEUTRAL into FORWARD or REVERSE.

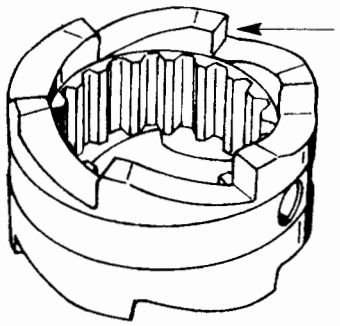

5. Inspect bushing surfaces of propeller shaft for pitting or wear. Replace shaft and corresponding bushing if wear or pitting is observed.
6. Replace shaft if any of the following exist:
   - Splines are twisted or worn.
   - Oil seal surface is grooved.
   - Shaft has a noticeable "wobble" or is bent more than 0.006 in. (0.15mm).

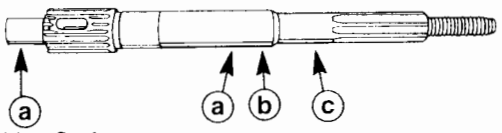

a-Bushing Surfaces
b-Oil Seal Surface
c-Measure Here for "Wobble" (When measuring shaft for wobble, use v-blocks and support at bushing surface)

Water Pump, Drive Shaft and Shift Shaft

1. Remove four (4) bolts from pump cover.

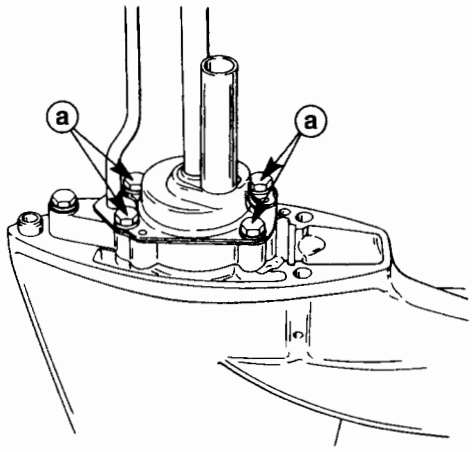

a-Bolts (4)

2. Remove cover, nylon washers (above and below impeller), impeller and drive key from drive shaft.

3. It is recommended that impeller be replaced whenever gear case is being serviced.

Note:
If impeller is not going to be replaced, DO NOT install impeller in reverse rotation to its original state as vanes have taken a set. Vanes will crack and break shortly after outboard is returned to service.

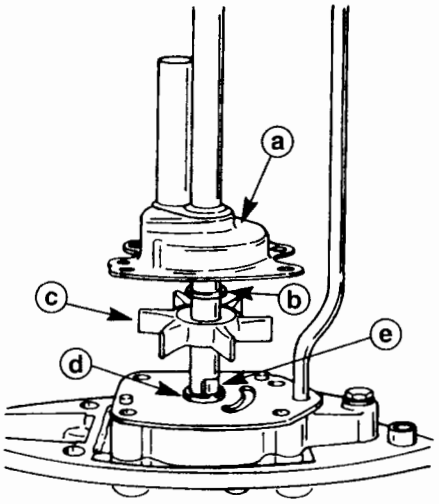

a-Cover
b-Nylon Washer
c-Impeller
d-Nylon Washer
e-Key

4. Remove guide from cover.
5. Replace rubber seal if damaged.
6. Replace cover if inside is grooved.

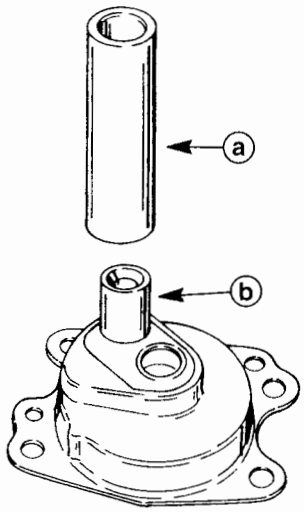

a-Guide
b-Seal

7. Remove plate, gasket, quad-ring seal, bolt and washer.
8. Replace plate if grooved.

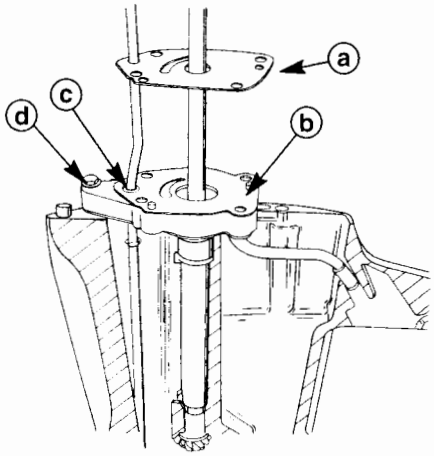

a-Plate
b-Gasket (Discard)
c-Quad-Ring Seal
d-Bolt and Washer

9. Replace quad ring seal if damaged.

10. Remove water pump base and shift shaft from housing.

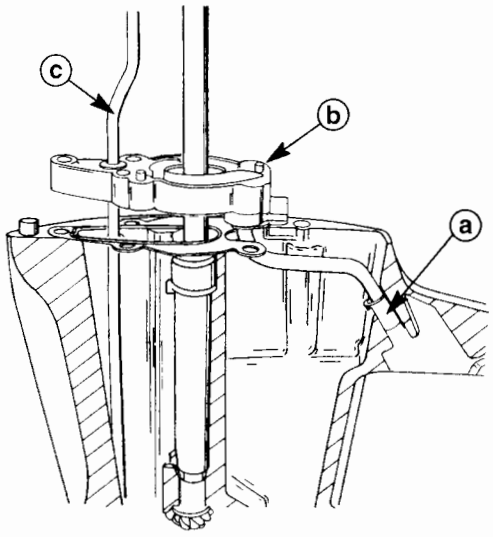

a-Seal
b-Pump Base
c-Shift Shaft

11. Remove gasket.

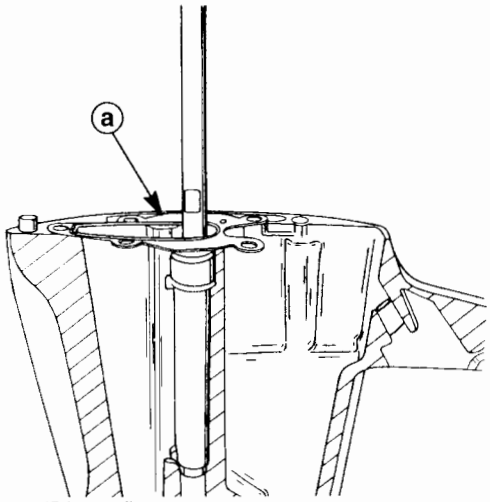

a-Gasket (Discard)

12. Inspect shift cam for wear. Replace if worn.

a-Shift Cam

13. Remove clip from shift shaft. Unthread shift cam. Remove shaft from water pump base.

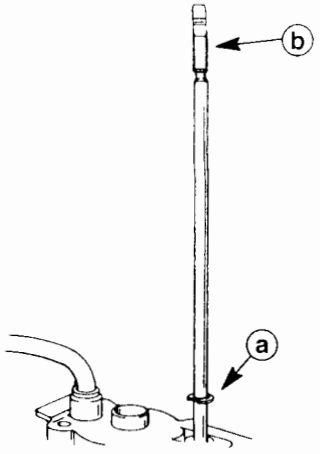

a-Clip
b-Shift Cam

14. Remove screw and pull water tube from base.

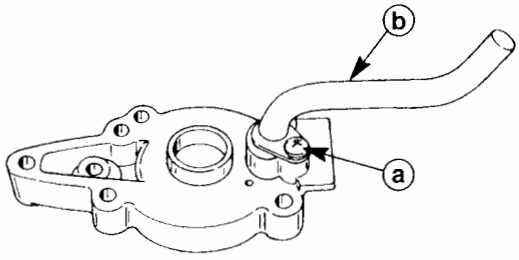

a-Screw
b-Water Tube

15. Replace seal if damaged. Replace water tube if corroded/eroded.

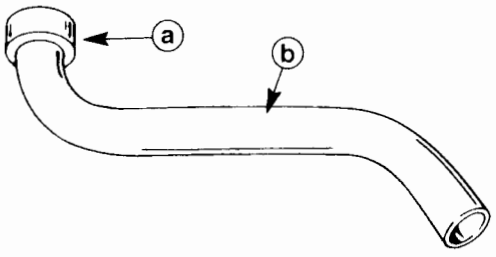

a-Seal
b-Water Tube

16. Remove drive shaft from gear housing.

Note:
Thrust washers, pinion gear and forward gear assembly are free to fall from housing when drive shaft is removed.

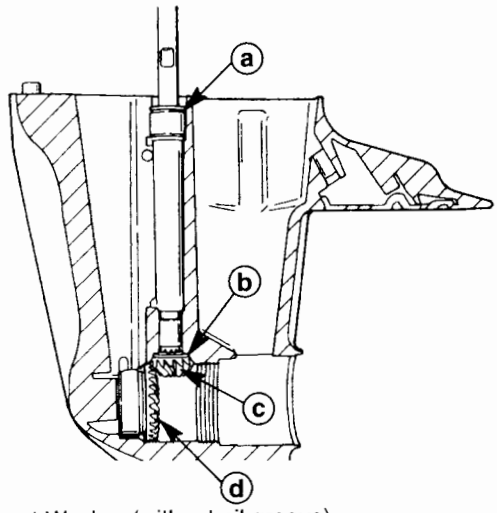

a-Thrust Washer (without oil groove)
b-Thrust Washer (with oil groove – groove faces down)
c-Pinion Gear
d-Forward Gear Assembly

17. Inspect bearing/bushing surfaces of drive shaft for pitting or wear. If shaft is pitted or worn, replace shaft and corresponding bearing/bushing.
18. Replace drive shaft if the following exist:
    - Splines are twisted or worn.
    - Oil seal surface is grooved.

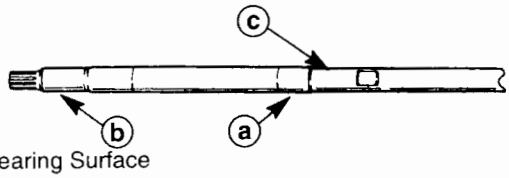

a-Bearing Surface
b-Bearing Surface
c-Seal Surface

19. Using a screwdriver or punch, carefully remove (and discard) seals from pump base.

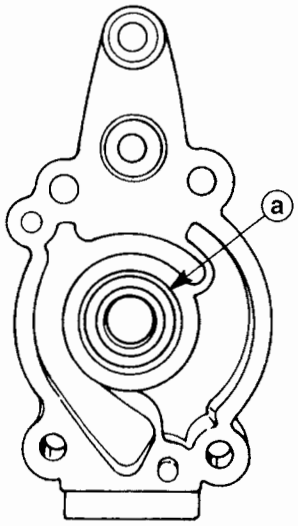

a-Seals

Pinion Gear and Forward Gear

PINION GEAR

1. Inspect pinion gear teeth for breakage, rust, chipping or excessive wear.
2. If pinion gear teeth are damaged, inspect FORWARD and REVERSE gear for damage.
3. Replace gears as required.

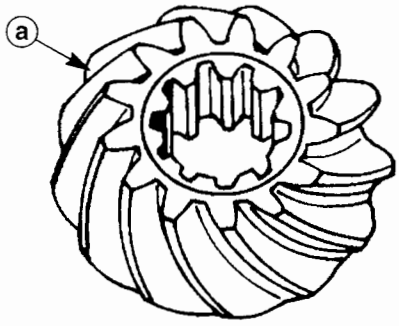

a-Pinion Gear

FORWARD GEAR

1. Inspect forward gear teeth for breakage, rust, chipping and excessive wear.
2. Inspect forward gear clutch jaws for wear. Rounded jaws indicate the following:
   - Improper shift cable adjustment or linkage.
   - Engine idle speed too high.
   - Shifting too slowly.

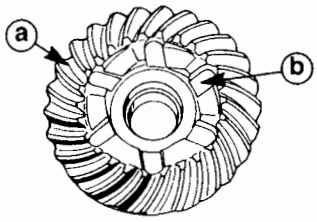

a-Gear Teeth
b-Clutch Teeth

3. Inspect propeller shaft FORWARD gear bushing surface to determine condition of bushing. If surface is discolored (from lack of lubricant), pitted or worn, propeller shaft and bushing should be replaced.

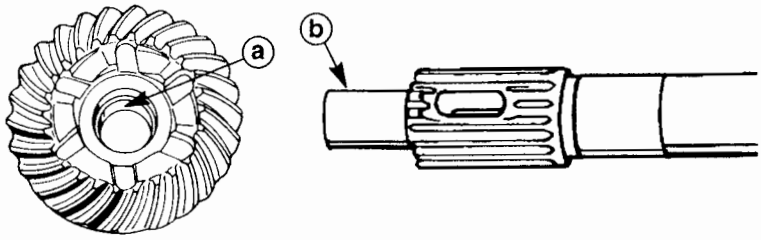

a-Bushing
b-Bushing Surface

4. If necessary, press bushing from gear using Bushing Removal Tool.

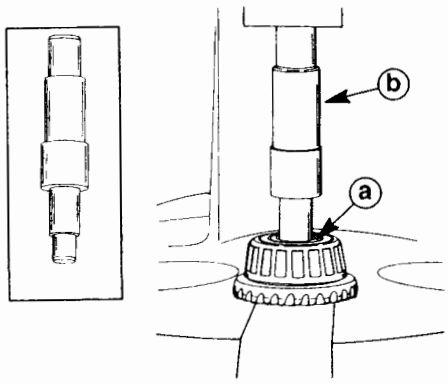

a-Bushing
b-Bushing Removal Tool

IMPORTANT: If FORWARD gear tapered bearing or race requires replacement, replace bearing and race as a set.

Note:
DO NOT remove tapered bearing from FORWARD gear unless replacement is necessary as removal process will damage bearing.

5. Inspect FORWARD gear tapered bearing and race for rust, roughness or excessive wear (looseness).
6. If bearing is in serviceable condition, DO NOT remove bearing from gear as removal process will damage bearing.
7. If bearing must be replaced, remove bearing from gear using Universal Puller Plate and a suitable mandrel (5/8 in. socket).

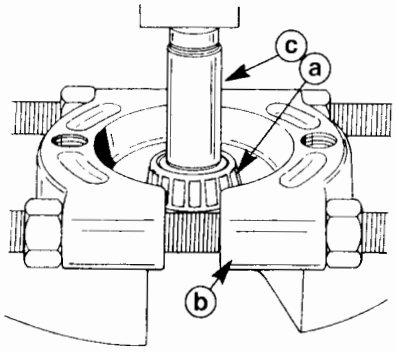

a-Bearing
b-Universal Puller Plate
c-Mandrel (5/8 in. Socket)

8. Replace FORWARD gear race if it is rusted or damaged or if FORWARD gear tapered bearing must be replaced. Remove race from housing using Bearing Puller Assembly and Puller Plate.

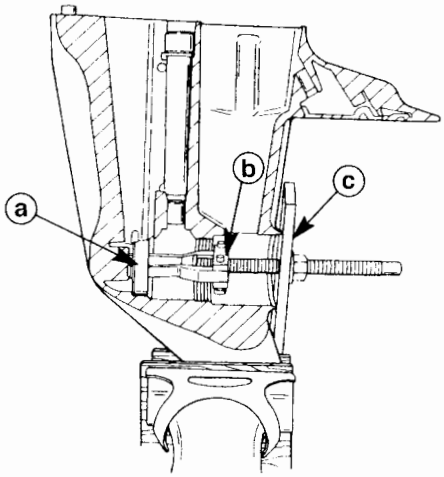

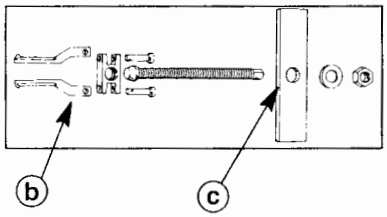

a-Race
b-Bearing Puller Assembly
c-Puller Plate

Drive Shaft Bushing, Bearing and Lubrication Sleeve

1. Inspect drive shaft bushing and bearing surface to determine condition of corresponding upper drive shaft bushing and lower drive shaft needle bearing. If drive shaft surface is rusted, pitted, discolored (blued-lack of lubrication) or worn; replace drive shaft and corresponding bushing/bearing. DO NOT remove bushing or bearing if replacement is not necessary.

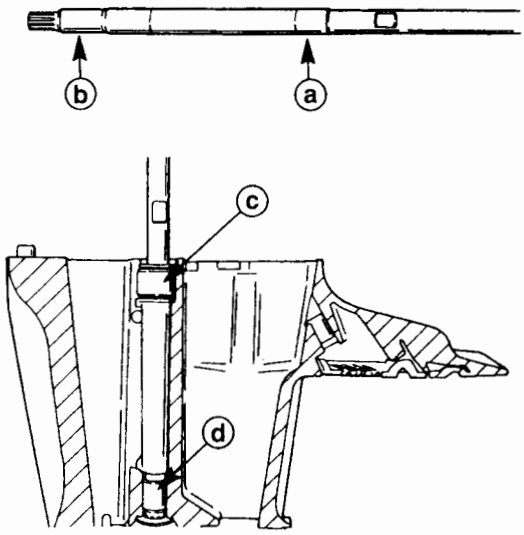

a-Bushing Surface
b-Bearing Surface
c-Upper Drive Shaft Bushing
d-Lower Drive Shaft Needle Bearing

IMPORTANT: If upper drive shaft bushing or lower drive shaft needle bearing appear to be spinning in their respective bores, the gear housing should be replaced.

2. To replace upper drive shaft bushing, use
   Snap On'*Expanding Rod
   Snap On Collet
   Slide Hammer

*Purchase from: Snap On Tools Corporation
2801-80th Street
Kenosha, WI 53141-141O

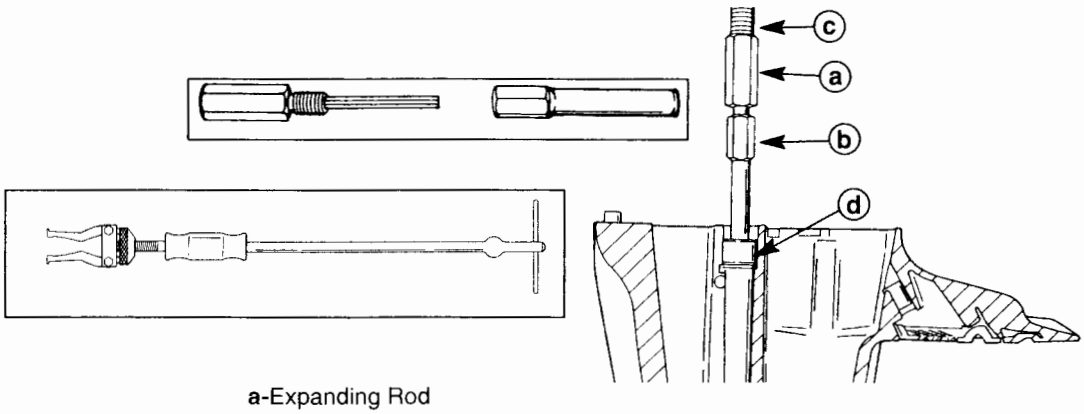

a-Expanding Rod
b-Collet
c-Slide Hammer
d-Bushing

3. To gain access to lower drive shaft needle bearing, remove lubrication sleeve.

Note:
When upper drive shaft bushing is installed, a burr may be formed preventing the removal of the lubrication sleeve. Use a knife to remove burr.

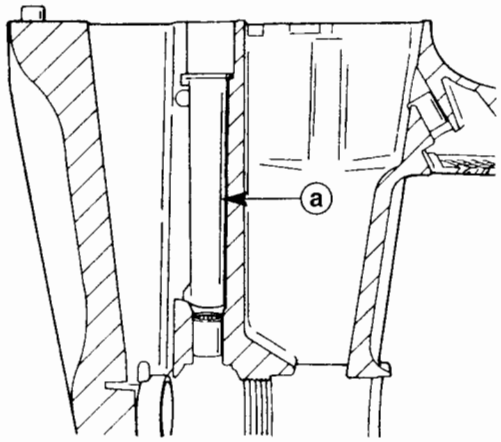

a-Lubrication Sleeve

4. Remove needle bearing using Drive Shaft Bearing Removal Tool.

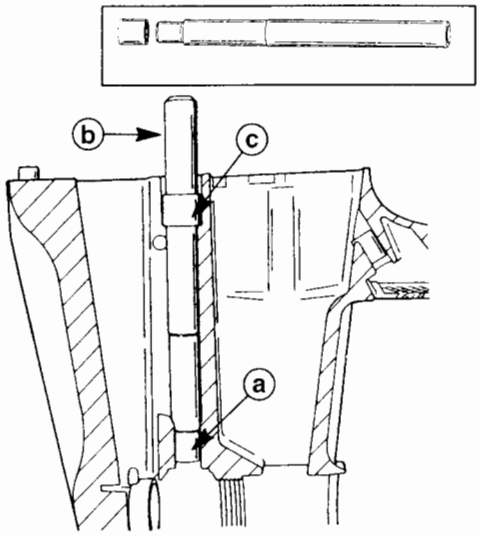

a-Needle Bearing
b-Driver Rod
c-Pilot

Aluminum Anode and Water Inlet

1. Replace aluminum anode if more than 50% consumed.
2. Remove water inlet and check that holes are not obstructed.

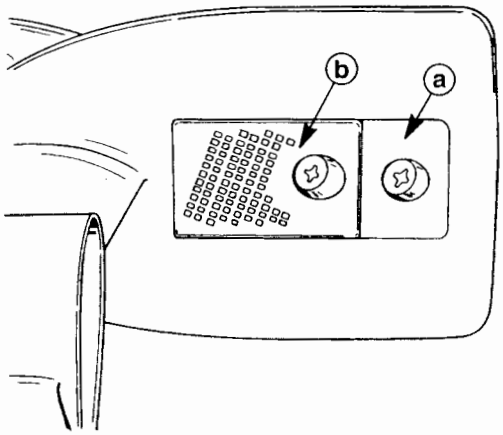

a-Aluminum Anode
b-Water Inlet

3. Reassembly

Drive Shaft Needle Bearing, Bushing and Lubrication Sleeve Installation

1. Install lower drive shaft needle bearing (numbers/letters face down) using Drive Shaft Bushing Tool.

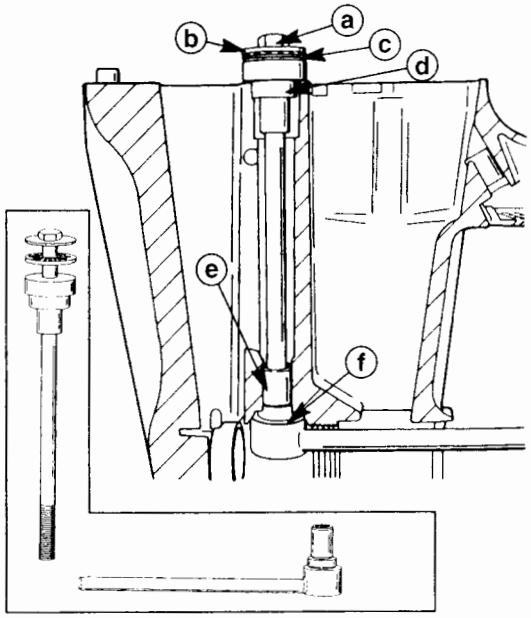

a-Puller Bolt
b-Flat Washer
c-Wafer Bearing
d-Pilot
e-Needle Bearing
f-Mandrel

2. Install lubrication sleeve.

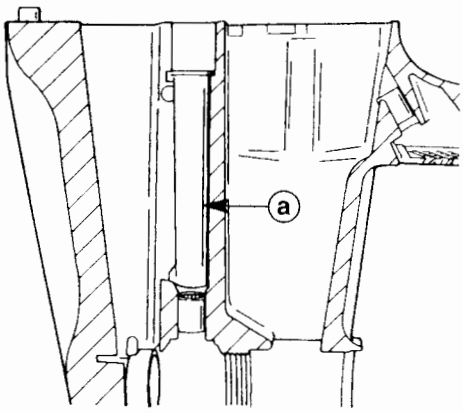

a-Sleeve

3. Install upper drive shaft bushing assembly using Drive Shaft Bushing Tool.

Note:
The upper drive shaft bushing is pressed into a sleeve. If the bushing is not worn into the sleeve or the bushing is not spinning within the sleeve, the bushing alone may be replaced. Press the new bushing into the sleeve using a suitable mandrel. If the sleeve is damaged, the bushing/sleeve assembly must be replaced.

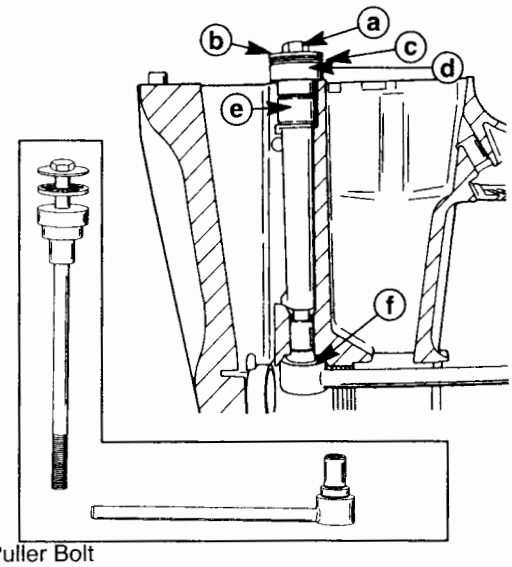

a-Puller Bolt
b-Flat Washer
c-Wafer Bearing
d-Pilot
e-Bushing/Sleeve
f-Mandrel

Forward Gear Bearing Race Installation

Install race into housing using Mandrel and Bearing Carrier Tool.

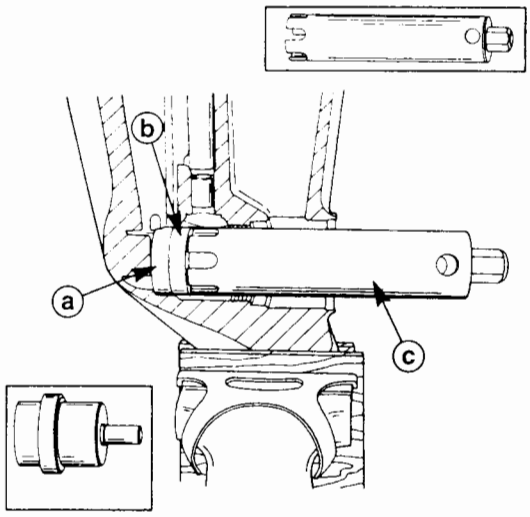

a-Race
b-Mandrel
c-Bearing Carrier Tool

Forward Gear Reassembly

Install bushing and bearing using Mandrel and press.

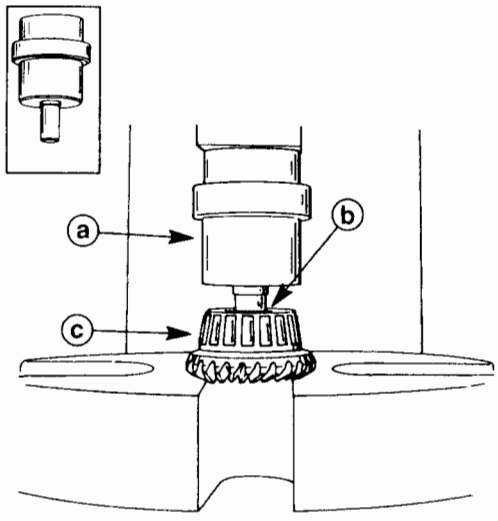

a-Mandrel
b-Bushing
c-Bearing

Bearing Carrier Reassembly

1. Apply Quicksilver Gear Lubricant to bushing and press bushing into carrier using Mandrel.

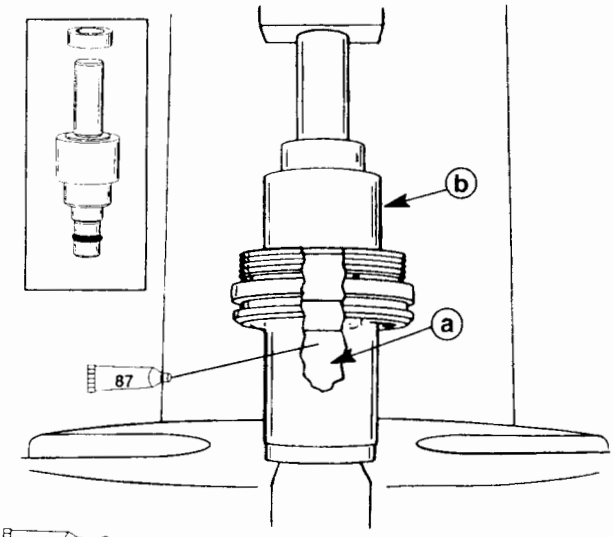

87 Super Duty Gear Lubricant
a-Bushing
b-Mandrel

2. Apply Loctite 271 to O.D. of seal and with lip facing bushing, press seal into carrier using Mandrel.

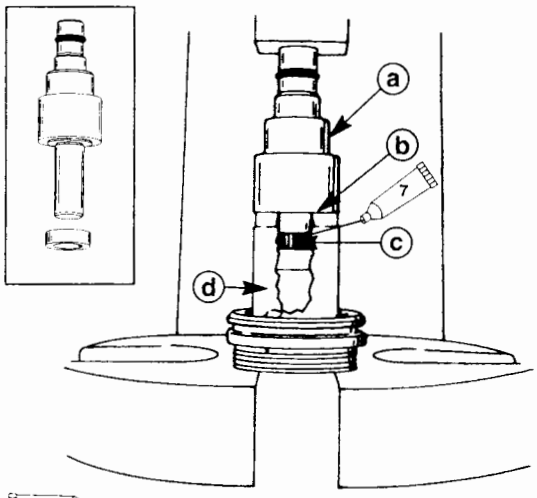

7 Loctite "271"
a-Mandrel
b-Ring (used with mandrel)
c-Seal (LIP FACES BUSHING)
d-Bushing

3. Apply Loctite 271 to O.D. of fishline cutter seal. With ring removed from Mandrel, press seal, with LIP FACING Mandrel, into carrier. Apply Special Lubricant 101 between lips of both seals.

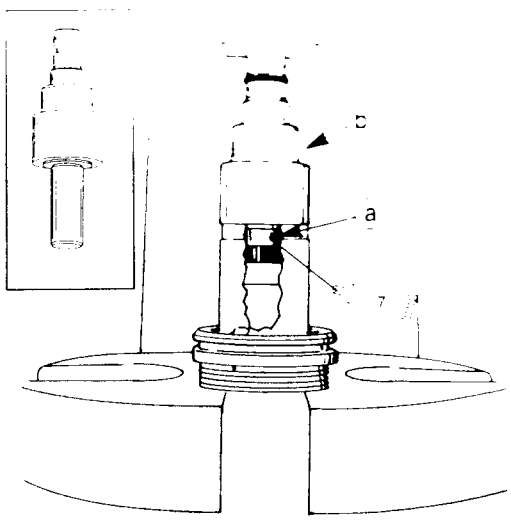

7 Loctite "271"

a-Fish Line Cutter Seal (LIP FACES MANDREL)
b-Mandrel (without Ring)

4. Apply 2-4-C w/Tleflon to O-ring and threads of bearing carrier. Install O-ring on carrier.

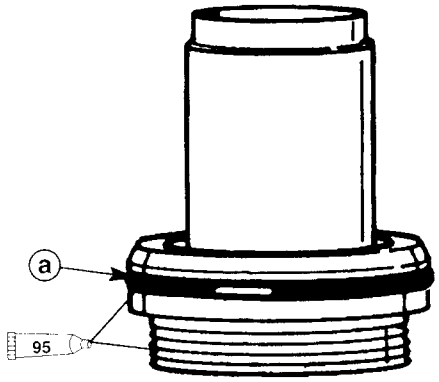

95 2-4-C w/Teflon

a-O-ring

Water Pump Base and Shift Shaft Reassembly

1. Apply Loctite 271 to O.D. of seal. With lip of seal facing DOWN, push seal into base using Mandrel.

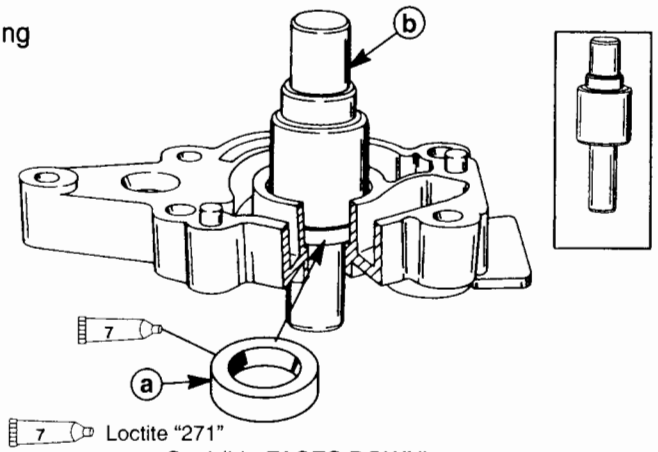

2. Apply Loctite 271 to O.D. of seal. With seal lip facing UP, push seal into base using Mandrel. Apply 2-4-C w/Teflon between lips of both seals.

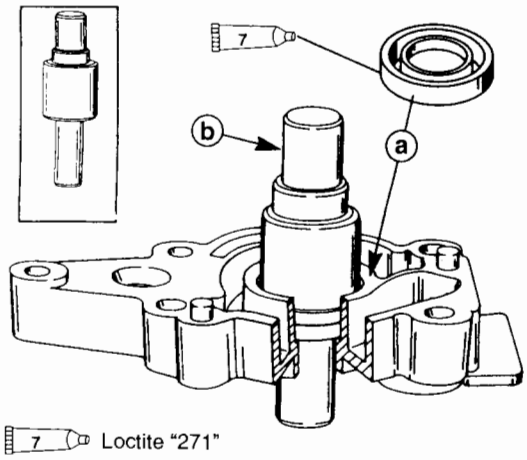

3. Install seal onto water tube.

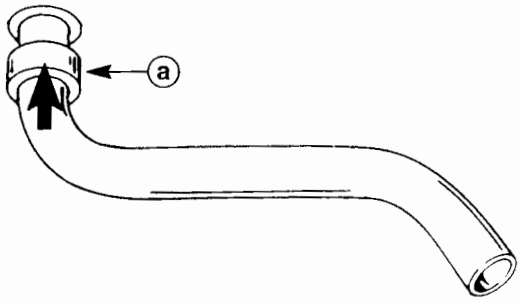

a-Seal

4. Secure water tube to pump base with retainer and screw.

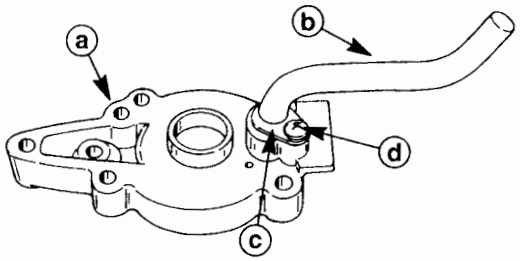

a-Pump Base
b-Water Tube
c-Retainer
d-Screw

5. Install shift shaft through pump base.
6. Install E-clip on shift shaft. Clip must be below pump base.
7. Thread shift cam onto shaft as shown.

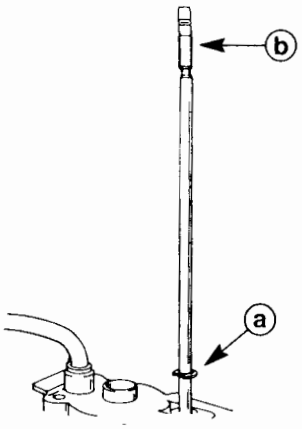

a-E-clip
b-Shift Cam

Propeller Shaft Reassembly

1. Slide clutch onto propeller shaft.

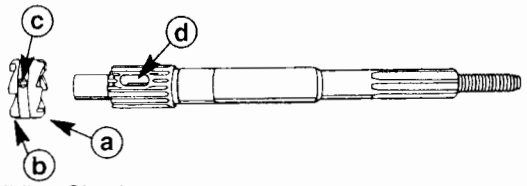

a-Sliding Clutch
b-Short End (FORWARD Gear Side)
c-Hole (must align with slot)
d-Slot

2. Insert cam follower spring into shaft.

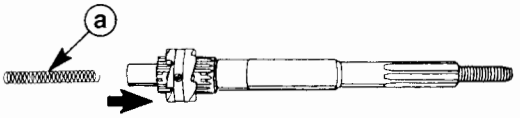

a-Spring

3. Compress spring and install NEW groove pin.

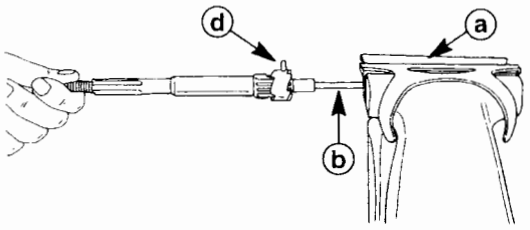

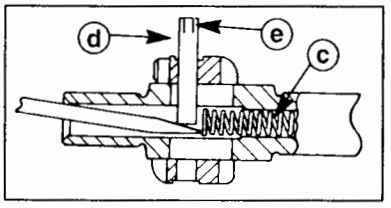

a-Vise
b-Screwdriver or small Punch
c-Spring
d-Groove Pin (Press in until Flush)
e-Serrations

4. Apply 2-4-C w/Teflon to cam follower (flat side) and install follower into shaft.

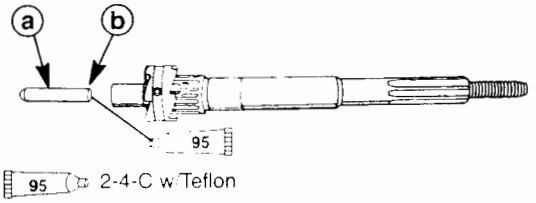

95 2-4-C w/Teflon

a-Cam Follower
b-Flat Side

Forward Gear, Pinion Gear and Drive Shaft Installation

1. Install FORWARD gear assembly into forward gear race.
2. Install drive shaft through upper drive shaft bushing, oil sleeve and lower drive shaft needle bearing.
3. While lifting drive shaft slightly, install lower thrust washer (GROOVED SIDE FACES DOWN) and PINION gear. It may be necessary to rotate drive shaft slightly to engage pinion gear with splines of drive shaft and with forward gear teeth.
4. Install upper thrust washer above upper drive shaft bushing.

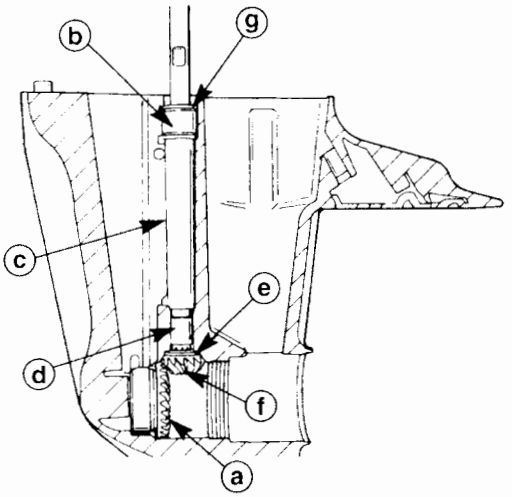

a-FORWARD Gear Assembly
b-Drive Shaft Bushing
c-Oil Sleeve
d-Needle Bearing
e-Lower Thrust Washer (GROOVED SIDE FACES DOWN)
f-Pinion Gear
g-Upper Thrust Washer

Shift Shaft and Water Pump Base Installation

1. Apply 2-4-C w/Teflon to I. D. of seal.
2. Install seal in housing with tapered end facing up.

Note:
Align rubber tab on seal to hole in tube cavity.

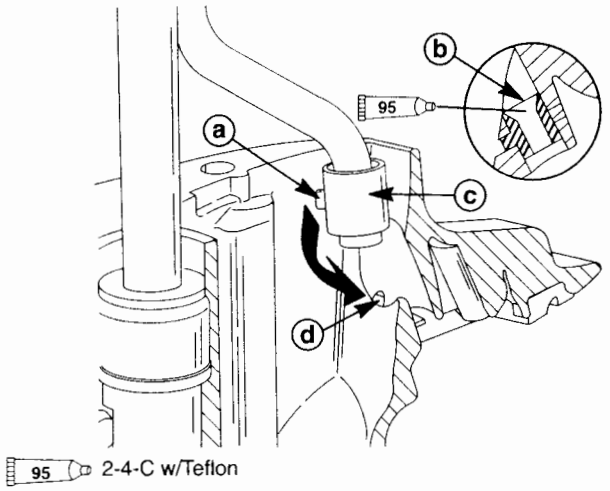

a-Rubber Tab
b-Tapered I.D.
c-Seal
d-Hole in Cavity

3. Install base gasket with drain hole positioned as shown.

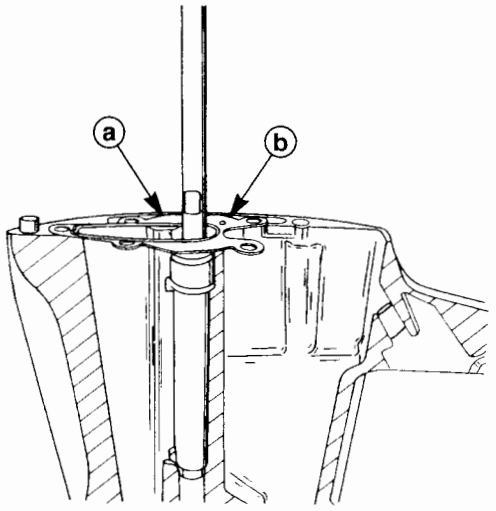

a-Base Gasket
b-Hole

IMPORTANT: Verify seal is not pushed out of position when water tube is installed.

4. Slide water pump base with shift shaft down drive shaft. Align water tube with seal in housing while seating water pump base.

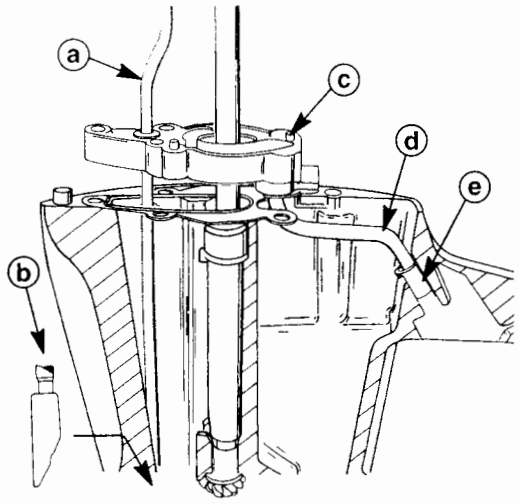

a-Shift Shaft
b-Shift Cam (POSITION AS SHOWN)
c-Pump Base
d-Water Tube
e-Seal

5. Apply 2-4-C w/Teflon to I. D. and O. D. of shift shaft quad ring. Seat quad ring in pump base.
6. Apply Loctite 271 to bolt threads and secure pump base to housing with bolt and washer. Torque bolt to 50 lb-in. (5.6 Nm).
7. Install gasket and face plate.

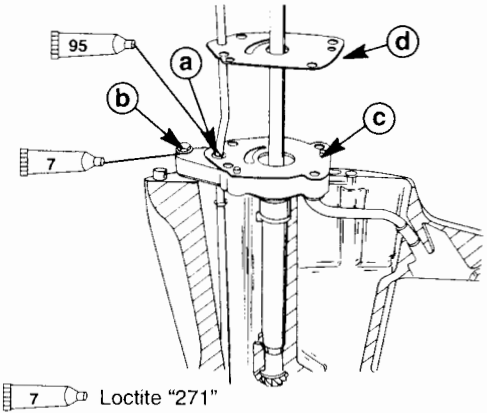

7 Loctite "271"
95 2-4-C w/Teflon

a-Quad Ring
b-Bolt and Washer [Torque to 50 lb-in. (5.6 Nm)]
c-Gasket
d-Face Plate

Water Pump Cover Reassembly

1. Apply 2-4-C w/Teflon to O. D. of seal and seal surface.
2. Install seal into cover.
3. Place water tube guide onto seal.

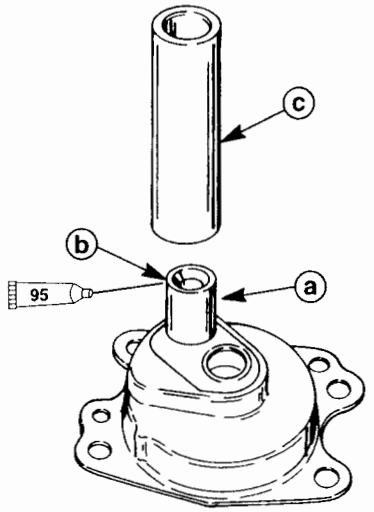

95 2-4-C w/Teflon

a-Seal
b-Seal Surface
c-Guide

Impeller and Pump Cover Installation

1. Install lower neoprene washer.
2. Install drive key. Use 2-4-C w/Teflon to hold key to drive shaft.

IMPORTANT: It is recommended that the impeller be replaced regardless of appearance. If impeller must be reused, it must be installed in the direction of original rotation. Installing impeller with vanes reversed from their previous "set" will result in vane breakage shortly after unit is returned to service.

3. Install new impeller and align with drive key.
4. Install upper neoprene washer.
5. Lubricate I. D. of water pump cover with 2-4-C w/Teflon.
6. Install cover on drive shaft and while pushing down on cover, rotate drive shaft CLOCKWISE and install cover over impeller.

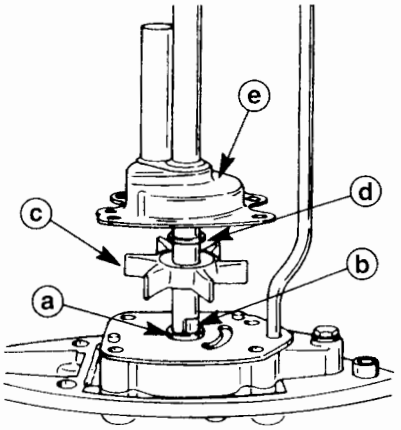

a-Lower Neoprene Washer
b-Drive Key
c-Impeller
d-Upper Neoprene Washer
e-Cover

7. Apply Loctite 271 to threads of bolts. Secure cover with bolts and torque to 50 lb-in. (5.6 Nm) per following numbered torque sequence.

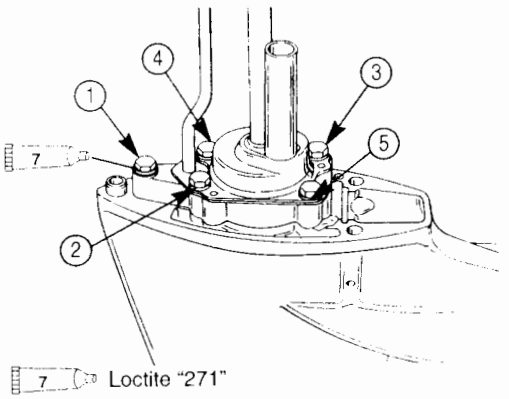

Propeller Shaft and Bearing Carrier

Installation

1. Install REVERSE gear into bearing carrier.
2. If not previously lubricated, apply 2-4-C w/Teflon to O-ring.
3. Apply 2-4-C w/Teflon to bearing carrier threads and pilot diameter.
4. Slide bearing carrier onto propeller shaft and install entire assembly into gear housing.

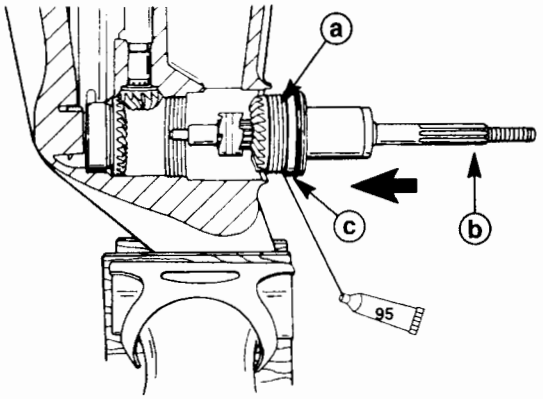

95 2-4-C w/Teflon

a-Bearing Carrier Threads
b-Propeller Shaft
c-Pilot Diameter

5. Torque bearing carrier (LEFT HAND THREAD) to 85 lb-ft (115.2 Nm) using Bearing Carrier Tool.

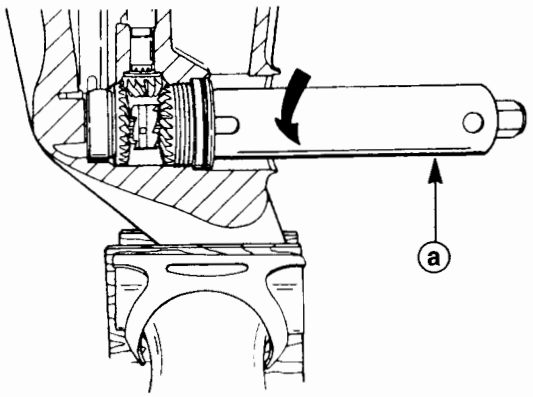

a-Bearing Carrier Tool

Aluminum Anode and Water Inlet Installation

Secure anode and water inlet with screws.

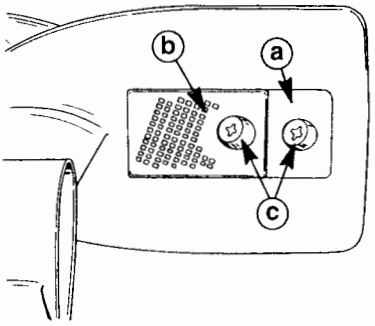

a-Anode
b-Water Inlet
c-Screws

Filling Gear Housing with Lubricant

Note:
Gear housing lubricant capacity – 6.8 oz (205 ml).

IMPORTANT: DO NOT use automotive grease in the gear housing.

1. Remove any gasket material from "FILL" and "VENT" screws and housing.
2. Install new gaskets on "FILL" and "VENT" screws.

IMPORTANT: Never apply lubricant to gear housing without first removing "VENT" screw or gear housing cannot be filled because of trapped air. Fill gear housing ONLY when housing is in a vertical position.

3. Slowly fill housing through "FILL" hole until lubricant flows out of "VENT" hole and no air bubbles are present.
4. Reinstall "VENT" screw and gasket.
5. Remove grease tube from "FILL" hole and quickly install "FILL" screw and gasket.

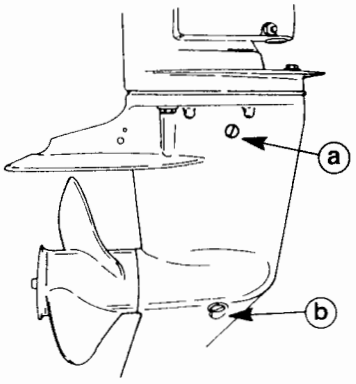

a-Vent Screw
b-Fill Screw

4. Installation

⚠ WARNING

To prevent accidental engine starting, remove (and isolate) spark plug leads from spark plugs. BEFORE installing gear housing.

1. Remove (and isolate) spark plugs leads from spark plugs.
2. Apply a 1/4 in. (6.4 mm) diameter bead of RTV Sealer on water pump base.

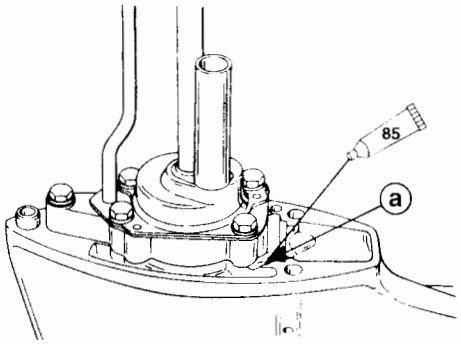

85 RTV Silicone Sealer
a-RTV Sealer

3. Place gear housing into forward gear. Pull shift shaft all-the-way up.
4. Turn the shift shaft in (clockwise) until it bottoms out, than back out the shift shaft two turns until the bend in the shaft is positioned as shown.

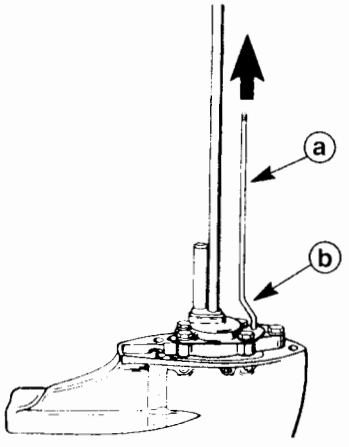

a-Shift Shaft (Pull all-the-Way Up) for Forward Gear
b-Position Bend Towards Back of Gear Housing

IMPORTANT: If water tube has been removed, follow installation procedure in Section 5. Water tube location is critical for proper alignment to water pump.

5. Tilt outboard to full "UP" position.
6. Place shift handle (tiller models) or shift lever (remote control models) into neutral.
7. Place gear housing into neutral by pushing down on the lower shift shaft (from forward gear) to neutral detent. (Propeller will rotate freely in either direction).
8. Coat splines of drive shaft with 2-4-C w/Teflon.
9. Guide gear housing onto drive shaft housing to aligning the following:
   - Keep mating surfaces of gear housing/drive shaft housing parallel.

Note:
It may be necessary to rotate the flywheel to aid engagement of drive shaft splines to crankshaft splines.

- Insert drive shaft into the opening in the upper part of the drive shaft housing to align with crankshaft splines.
- Guide lower shift shaft thru rubber seal/opening in lower drive shaft housing and up thru loop of reverse lock link rod.
- Position water tube guide onto water tube.

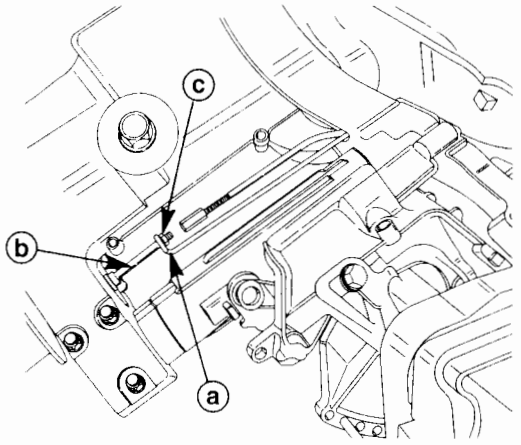

a-Reverse Lock Link Rod
b-Lower Shift Shaft
c-Jam Nut

10. Install 3 bolts and torque to 15.0 lb-ft. (20.3 Nm).

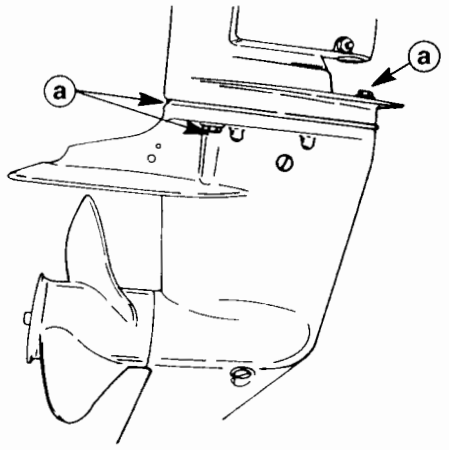

a-Bolts [Torque to 15.0 lb-ft. (20.3 Nm)]

11. Thread (retained) "jam" nut onto lower shift to expose five (5) threads above the nut.
12. Reconnect shift shaft coupling and tighten "jam" nut against coupler.
13. Shift to forward gear.
14. Assemble reverse hook guide around lower shift shaft and tighten bolt/nut to allow adjustment.

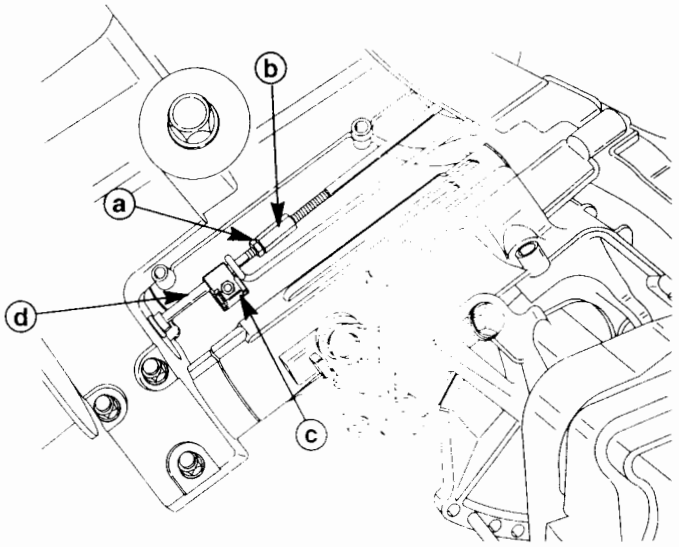

a-Jam Nut
b-Coupling
c-Reverse Hook Guide
d-Lower Shift Shaft

15. Lift and hold reverse lock hook in the full up position.
16. Slide reverse hook guide up shift shaft to make contact with loop of reverse lock link rod. DO NOT bend link rod. Tighten guide bolt/nut to a torque of 50 lb-in. (5.7 Nm).

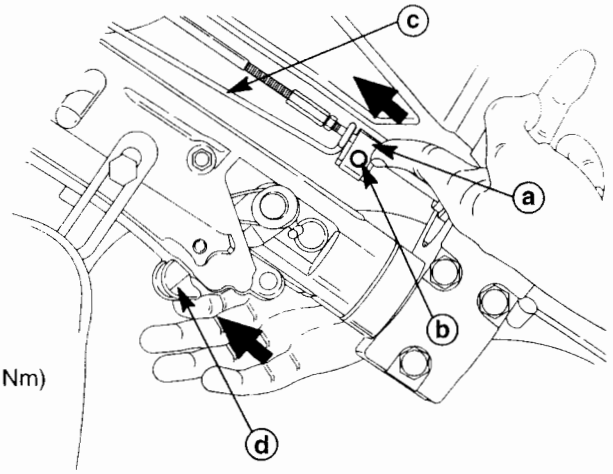

a-Reverse Hook Guide
b-Bolt/Nut - Torque to 50 lb-in. (5.7 Nm)
c-Reverse Lock Hook Link Rod
d-Reverse Lock Hook

17. Lower outboard to the normal operating position.
18. Check reverse lock operation as follows:
    - Forward Gear-Reverse lock fully released. Outboard will tilt up.
    - Neutral-Reverse lock engaged. Outboard will not tilt up.
    - Reverse Gear-Reverse lock fully engaged. Outboard will not tilt up.
19. Shift outboard into reverse and verify that free play exists between lower loop of reverse lock link rod and shift shaft coupling "jam".
20. If no free play exists, turn coupling up shift shaft a maximum of 1-1/2 turns and re-tighten jam nut against coupling.

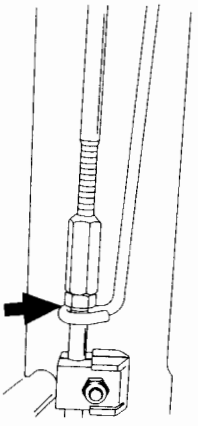

21. Check shift operation as follows:
    - Place shift lever in FORWARD. Gear housing should ratchet when propeller shaft is turned clockwise and resistance should be felt when propeller is turned counterclockwise.
    - Place shift lever in NEUTRAL. Resistance should NOT be felt when propeller shaft is rotated in either direction.
    - Place shift lever in REVERSE. Resistance should be felt when propeller shaft is rotated in either direction.
    - If shift operation is not as described, recheck the coupler installation procedure.

9.9B/15B

1. Disassembly of Gear Case

The gear case can be removed without removing the power unit from the outboard motor.

Removal of propeller

① Split pin
② propeller nut
③ propeller
④ Thrust holder
⑤ Propeller shaft
⑥ Propeller shaft housing
⑦ Washer

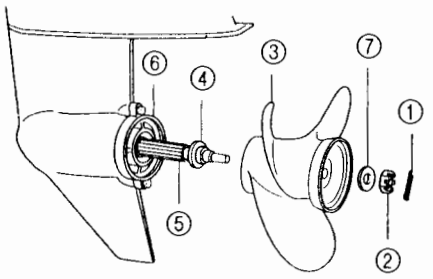

1. Remove the following:
- Split pin ①
- Propeller nut ②
- Washer ⑦
- Propeller ③
- Thrust holder ④

Removal of gear case

1. Remove the following:
- Spring pin
  (Remove the spring from the upper side of gear shift rod joint ①.)

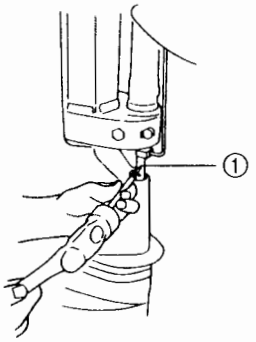

Note:
Remove the spring pin using the spring pin tool.

2. Remove the following:
- Gear case nuts (N 8-4)
- Gear case assembly
  (Pull out the assembly from the bottom.)

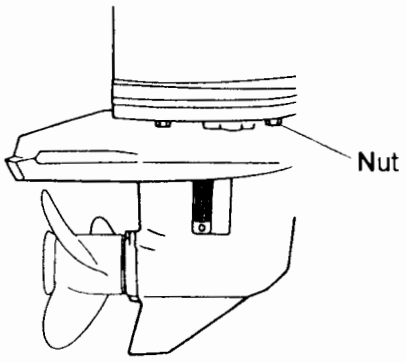

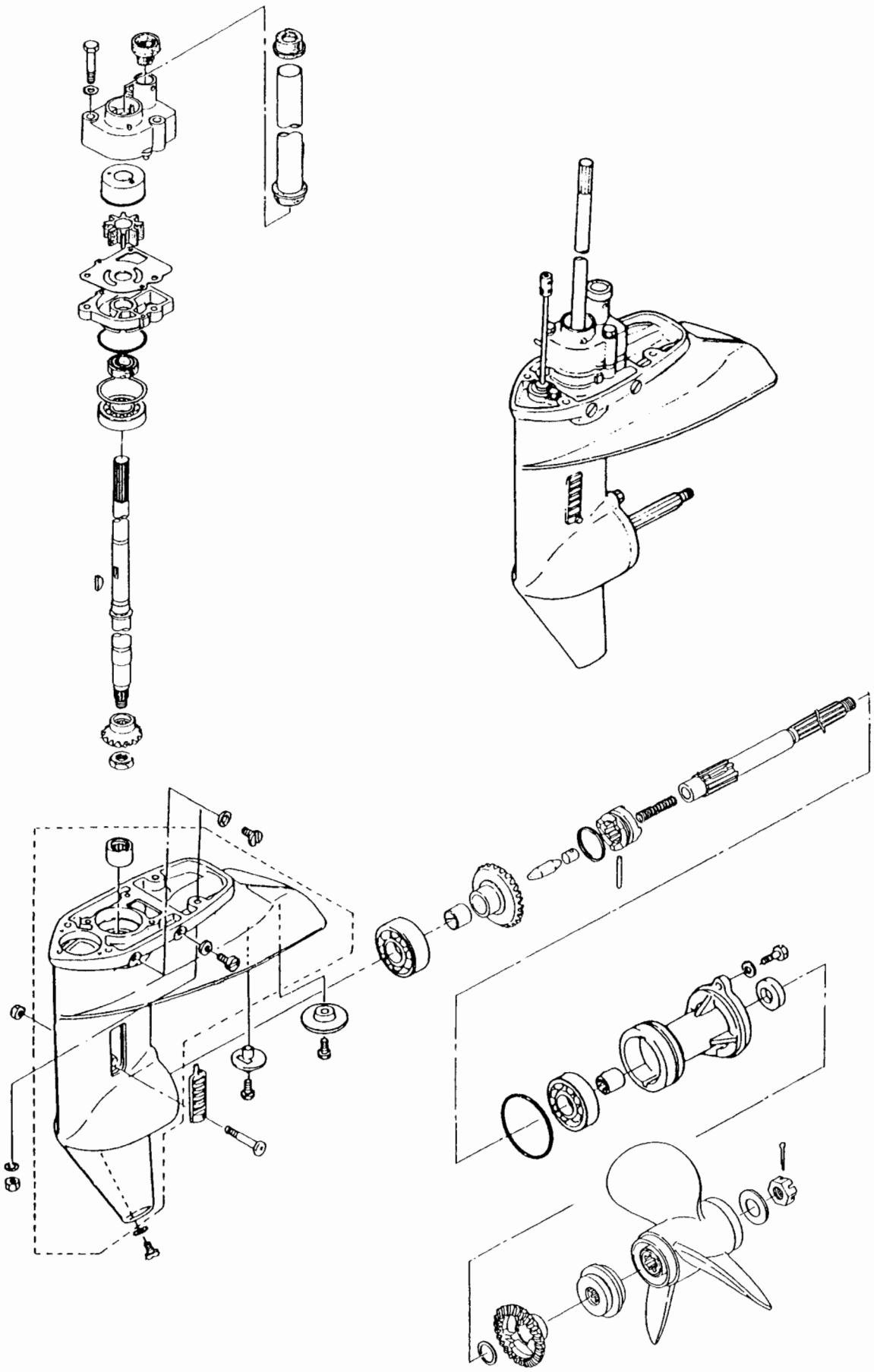

Disassembly of water pump case

① Water pump case
② Drive shaft
③ Cam rod

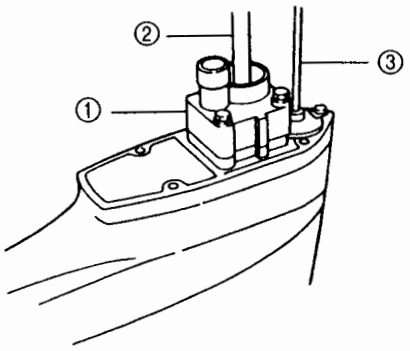

1. Drain the gear oil.
2. Remove the following:
   - Water pump case bolts (H652-3)
   - Water pump case ①
   - Pump impeller (Pull out from the top.)
   - Pump impeller key
   - Lower pump case

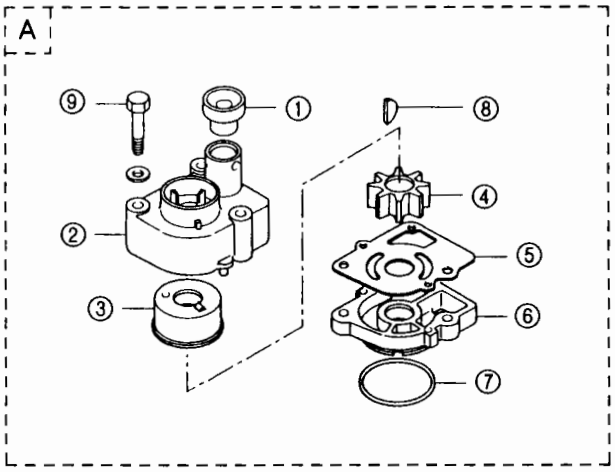

A Water pump assembly
① Lower water pipe grommet
② Water pump case
③ Pump case liner
④ Pump impeller
⑤ Water pump guide plate
⑥ Lower water pump case
⑦ O-ring
⑧ Pump impeller key
⑨ Pump case bolt

Disassembly of propeller shaft and clutch

1. Remove the following:
   - Propeller shaft housing bolts (H625-2)
   - Propeller shaft housing (propeller shaft ① with bevel gear C ②)
   - Propeller shaft
2. Remove the clutch pin snap ⑤ from the peripheral groove of the clutch ④, and pull out the clutch pin ⑦ while pushing the push rod ⑥ lightly.

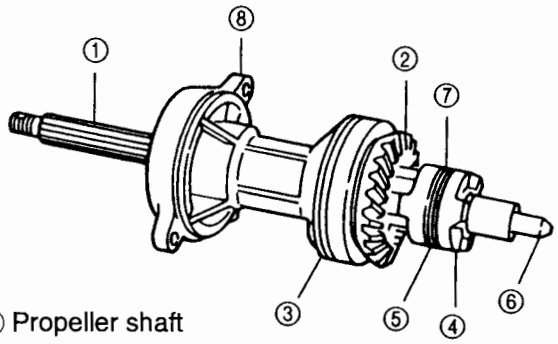

① Propeller shaft
② Bevel gear C
③ O-ring
④ Clutch
⑤ Clutch pin snap
⑥ Push rod
⑦ Clutch pin
⑧ Pull-out groove

> Note:
> Take care when you pull out the clutch pin because the push rod, clutch spring holder, and clutch spring are likely to fly out.

3. Remove the following:
   - Clutch
   - Push rod
   - Clutch spring holder
   - Clutch spring

Removal of clutch cam and cam rod

① Cam rod push stopper bolt
② Cam rod

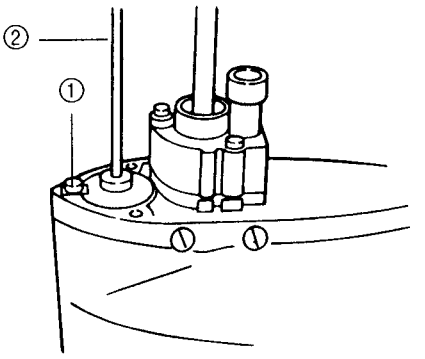

1. Remove the following:
   • Cam rod push stopper bolt ① (H512)
   • Cam rod ② (Pull out from the top.)
2. Remove the following:
   • Clutch cam spring pin
   • Cam rod spring pin
   • Clutch cam
   • Cam rod bush (Remove from the cam rod.)

Note:
Use the spring pin tool to remove the spring pin.

Removal of bevel gear and drive shaft

① Drive shaft
② Bevel gear B nut socket
③ Gear case
④ Bevel gear B
⑤ Bevel gear B nut wrench

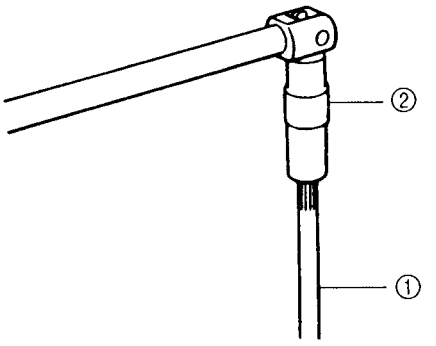

1. Remove the following:
   • Bevel gear B nut
   • Bevel gear B
   • Drive shaft
   • Bevel gear A
   • Bevel gear A bearing
   • Bevel gear C

Removal procedure:

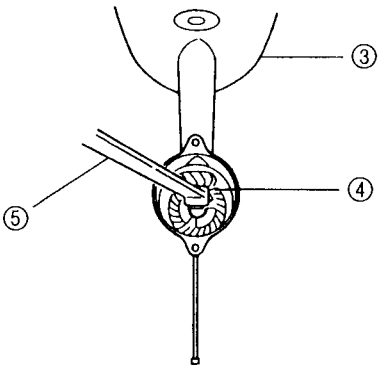

- Insert the bevel gear B socket nut ② in the spline of the drive shaft ①.
- Set the bevel gear B nut wrench ⑤ on the bevel gear B ④ nut on the gear case ③.
- Secure the bevel gear B nut, loosen the bevel gear B nut socket, then remove the bevel gear B nut the and bevel gear B.
- Hold the drive shaft, tap the gear case flange surface lightly with a plastic hammer, pull out the drive shaft, and then remove the bevel gear A.
- Remove the bevel gear A bearing using the bevel gear A bearing puller.
- Remove the bevel gear C from the propeller shaft housing.

Inspection items		
Bevel gears A, B, C and clutch	• Wear and damage to pawls of bevel gears A and C • Wear and damage to clutch pawl • Contact of tooth faces of bevel gears A, B and C • Wear in bearings for bevel gears A and C	Replace Replace Replace if necessary Replace if necessary
Propeller shaft	• Play between the clutch and meshing part (spline)	Replace if necessary
Drive shaft	• Misalignment of drive shaft • Wear in spline • Wear in contact part with needle roller bearing	Repair or replace Replace if necessary Replace if necessary
Water pump	• Wear in pump impeller • Wear and deformation of pump case liner • Wear in pump guide plate • Wear and crack in the rib of pump case lower oil seal	Replace Replace Replace if necessary Replace if necessary

2. Gear case assembly

Take the precautions described below and reverse the procedure for disassembly.

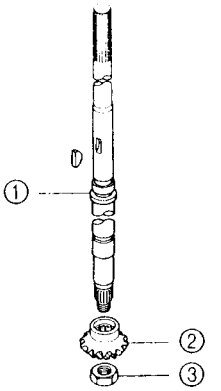

Installation of bevel gear and drive shaft

① Drive shaft
② Bevel gear B
③ Bevel gear B nut

1. Install the following:
   • Bevel gear A bearing

Note:
To press-fit the bearing, press the outer race.

2. Assemble the following:
   • Bevel gear B nut

Tightening torque: 35N – m (3.5 kg – m, 25 lb – ft)

Notes:
• Make sure you completely degrease the threaded part of the bevel gear B nut and drive shaft, apply Three Bond 1373-B and then tighten the nut.
• To tighten the nut, use the bevel gear B nut socket and bevel gear B nut wrench.

Installation of clutch cam and cam rod

① Clutch cam
② Clutch cam rod
③ Clutch cam spring pin

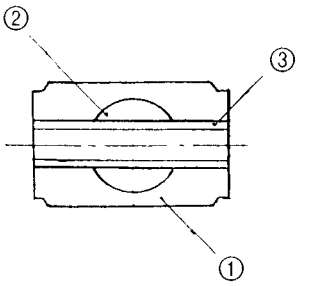

1. Install the following:
   • Cam rod O-ring A and B
   • Cam rod bush
   • Clutch cam ①
     (Install the cam on the clutch cam rod ②.)
   • Clutch cam spring pin ③ (ø3 x 12 ℓ)

Note;
• Apply gear oil to the O-rings inside and outside the cam rod bush before installation.
• Do not re-use the spring pin.
• Press-fit the spring pin using the spring pin tool and make sure it does not fly from the clutch cam periphery.

2. Install the following:
   • Cam rod
   • Cam rod bush stopper bolt (H512)
     (Apply the specified grease.)

Note:
After installation, check that the cam rod moves up and down smoothly.

Assembly of water pump case

① Pump case liner

② Pump case protrusion

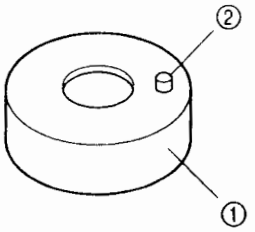

1. Install the following:

- Oil seal (13.8 × 26 × 9.5) (Apply gear oil.)
- O-ring (Apply cup grease.)
- Lower pump case
- Pump impeller key
- Pump case liner
- Water pump case
- Water pump case bolts (H652-3)

(Apply the specified grease.)

Notes:
- Take care to prevent damage to the oil seal when installing the lower pump case on the drive shaft.
- Install the pump impeller key with the large chamfer directed upward.
- Install the pump case liner onto the pump impeller while rotating the drive shaft clockwise when looking from the engine side and install the pump case.
  (Make sure that the blades of the pump impeller are not reversed.)

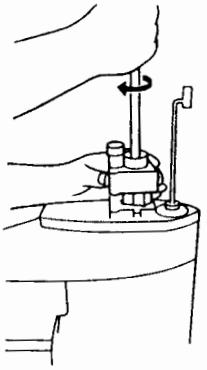

Assembly of propeller shaft and clutch

① Groove
② Bevel gear A side

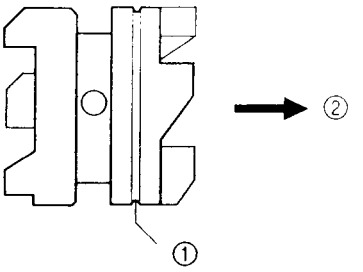

Note:
Before installing the clutch and the propeller shaft, make sure that operation is smooth and without any play.

1. Install the following:
- Clutch
- Clutch pin
- Clutch pin snap

Notes:
- Install the clutch so that the side with the groove ① faces the side with bevel gear A ②.
- Do no re-use the clutch pin snap.
  Also, assemble the clutch pin snap using the clutch pin snap tool.

2. Install the following:
- Propeller shaft oil seal (17-30-9)
  (Apply cup grease.)
- Needle bearing
  (Install in the propeller shaft housing.)
- Ball bearing
  (Install on the bevel gear C side.)
- Propeller shaft housing
- Propeller shaft housing bolts (H625-2)
  (Apply Three Bond 1342.)

Notes:
- Press-fit the needle bearing using the needle roller bearing tool.
- Install the propeller housing after applying gear oil on the O-ring and spigot.

Use a pressure and vacuum tester to insure repairs were completed correctly. Perform the pressure test at 49 kPa (0.5 kg/cm², 7 PSI). Draw 13 kPa (100 mmHg, 3.9 inches of mercury) for the vacuum test. Rotate the shafts, move the shift shaft up and down, there should be no leakage. If leakage occurs put the gearcase in water the bubbles will show you where the leak is coming from.

3. Inject gear oil.

Gear oil: Approx. 370 ml (specified gear oil)

Propeller installation

1. Install the following:
   - Propeller (Apply the specified grease on the propeller shaft.)

Installation of gear case

1. Install the following:
   - Gear case assembly
   - Gearcase nut

Notes:
- Insert the water pipe after applying oil on the water pipe seal rubber, so that there is no displacement or deformation of the seal rubber.
- Tighten the engine bolts after break-in.

Standards for oil seals and O-rings for gear case

A Gear case assembly drawing

Part name	Dimensions
Propeller shaft housing O-ring	ø2.4 × ø59.6
Propeller shaft oil seal	17 × 30 × 9
Lower pump case O-ring	ø3.5 × ø36
Lower pump case oil seal	13.8 × 26 × 9.5
Cam rod O-ring A	ø2.4 × ø5.8
Cam rod O-ring B	ø3.5 × ø36

A

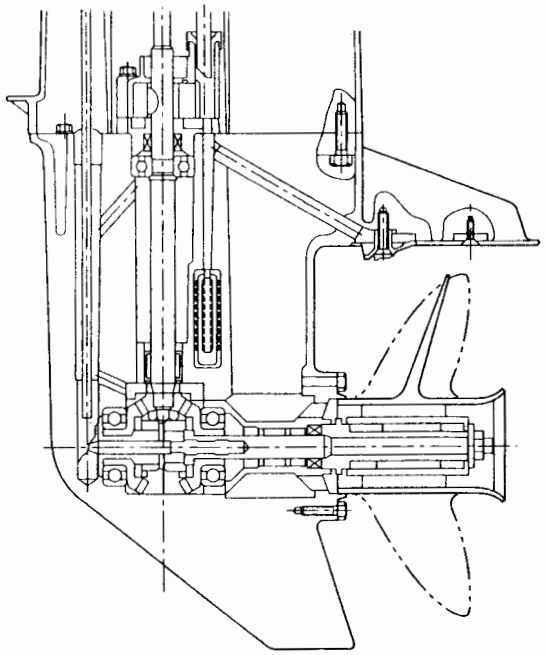

9.9A/15A

1. Clamp/Swivel Brackets & Drive Shaft Housing

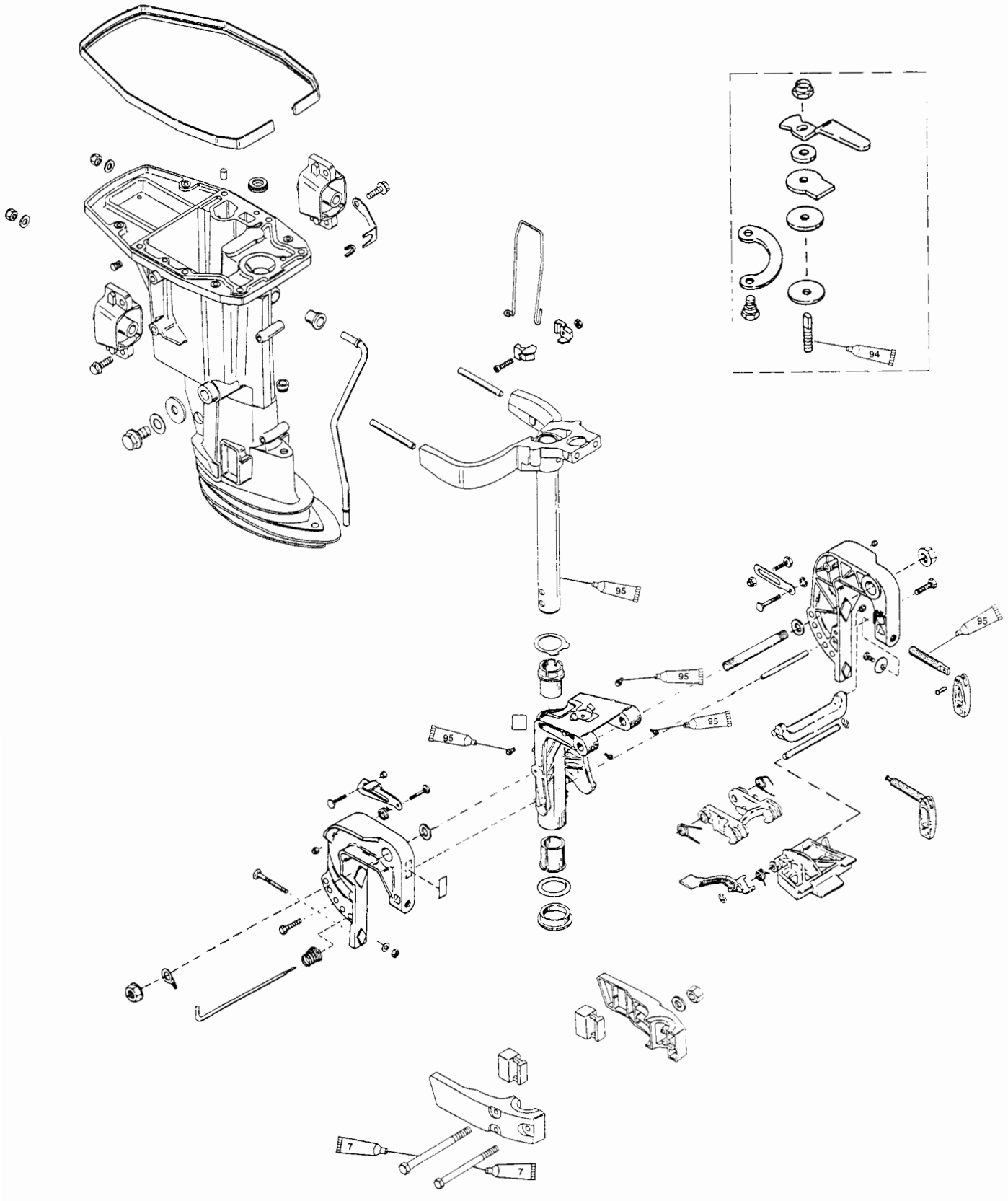

Driveshaft Housing Cover Removal/Installation

1. Remove driveshaft housing covers (4 screws and nuts).

Note:
To aid in removal of screws, a small straight screwdriver should be placed in nut pocket to prevent turning of nuts.

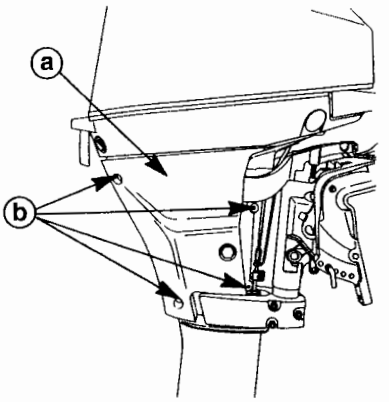

a-Driveshaft Housing Covers
b-Screws (4), Nuts (4)

2. Install driveshaft housing covers (4 screws and nuts).

Driveshaft Housing Cover Bolt Torque
30 lb-in. (3.4 Nm)

Upper Motor Mount Replacement

Note:
Change one mount at a time.

1. Remove driveshaft housing covers.
2. Remove two (2) bolts from upper mount.
3. Remove nut and washer from swivel head stud.

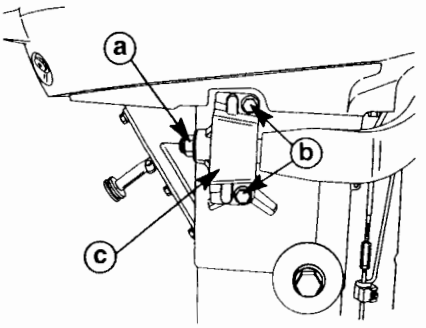

a-Nut and Washer
b-Bolts (2)
c-Upper Mount

4. Slide a piece of rubber hose over a screwdriver to prevent paint damage on outboard components. Pry up on lower cowl pan. Slide mount off of stud.

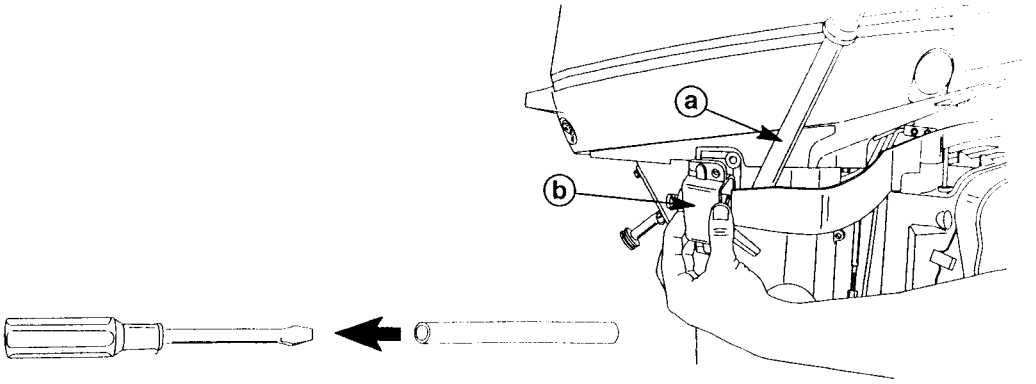

a-Rubber Padded Bar
b-Mount

5. Pry up on lower cowl pan to slide new mount over stud just enough to pass overtop lip on lower cowl pan. Remove pry bar. Push down on top of outboard (to seat mount). Mount should align into place.

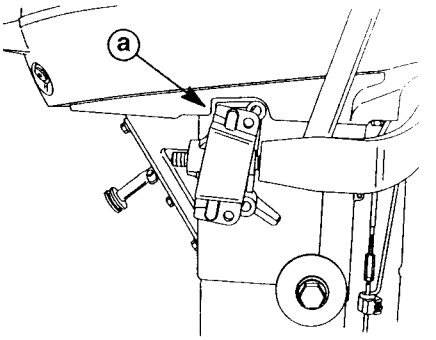

a-Lip on Lower Cowl Pan

6. First replace two (2) bolts into mount and then replace washer and nut.
7. Torque two (2) bolts to 15 lb-ft (20.3 Nm).
8. Torque nut to 32.5 lb-ft (44 Nm).
9. Re-install driveshaft housing covers.

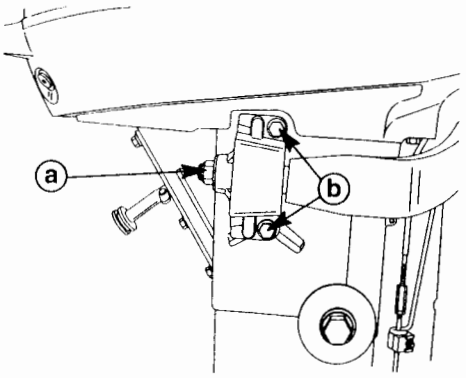

a-Nut and Washer - Torque to 32.5 lb-ft (44 Nm)
b-Bolts (2) Torque to 15 lb-ft (20.3 Nm)

Removal/Installation of Clamp Bracket Assembly

1. Shift outboard into reverse.
2. Remove driveshaft housing covers.
3. Lay outboard on backside.
4. Disconnect shift shaft.
5. Remove upper mount bolts and nuts.
6. Remove lower mount covers.

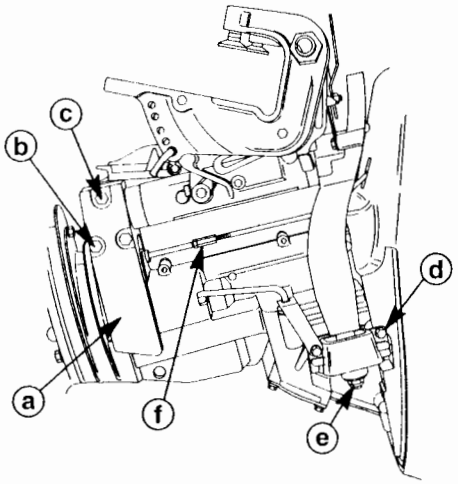

a-Covers-Lower Mount (2)
b-Bolts-Lower Mount M8x100 (2)
c-Bolt-Lower Mount M8x60
d-Bolts-Upper Mount (4)
e-Nuts-Upper Mount (2)
f-Shift Shaft

7. Remove upper mounts while lifting clamp bracket/swivel arm assembly from drive shaft housing.

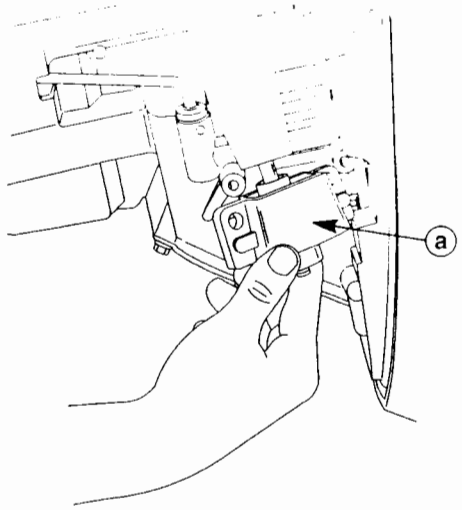

a-Upper Mounts

8. Remove clamp bracket/swivel arm assembly from outboard by freeing upper shift shaft from reverse hook lock.

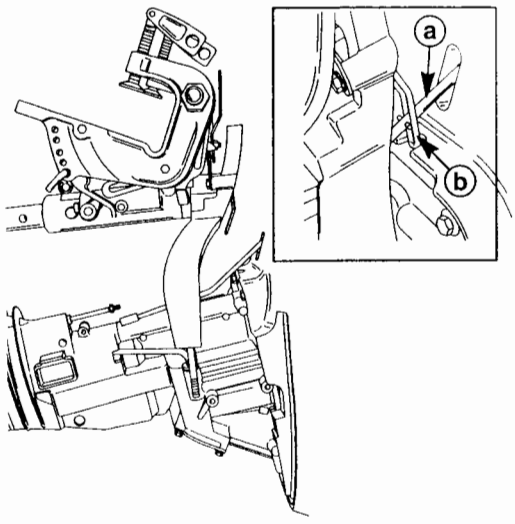

a-Upper Shift Shaft
b-Reverse Hook Lock

9. Reverse steps for installation. Refer to exploded views for correct torques.

9.9B/15B

2. Clamp/Swivel Brackets & Drive Shaft Housing

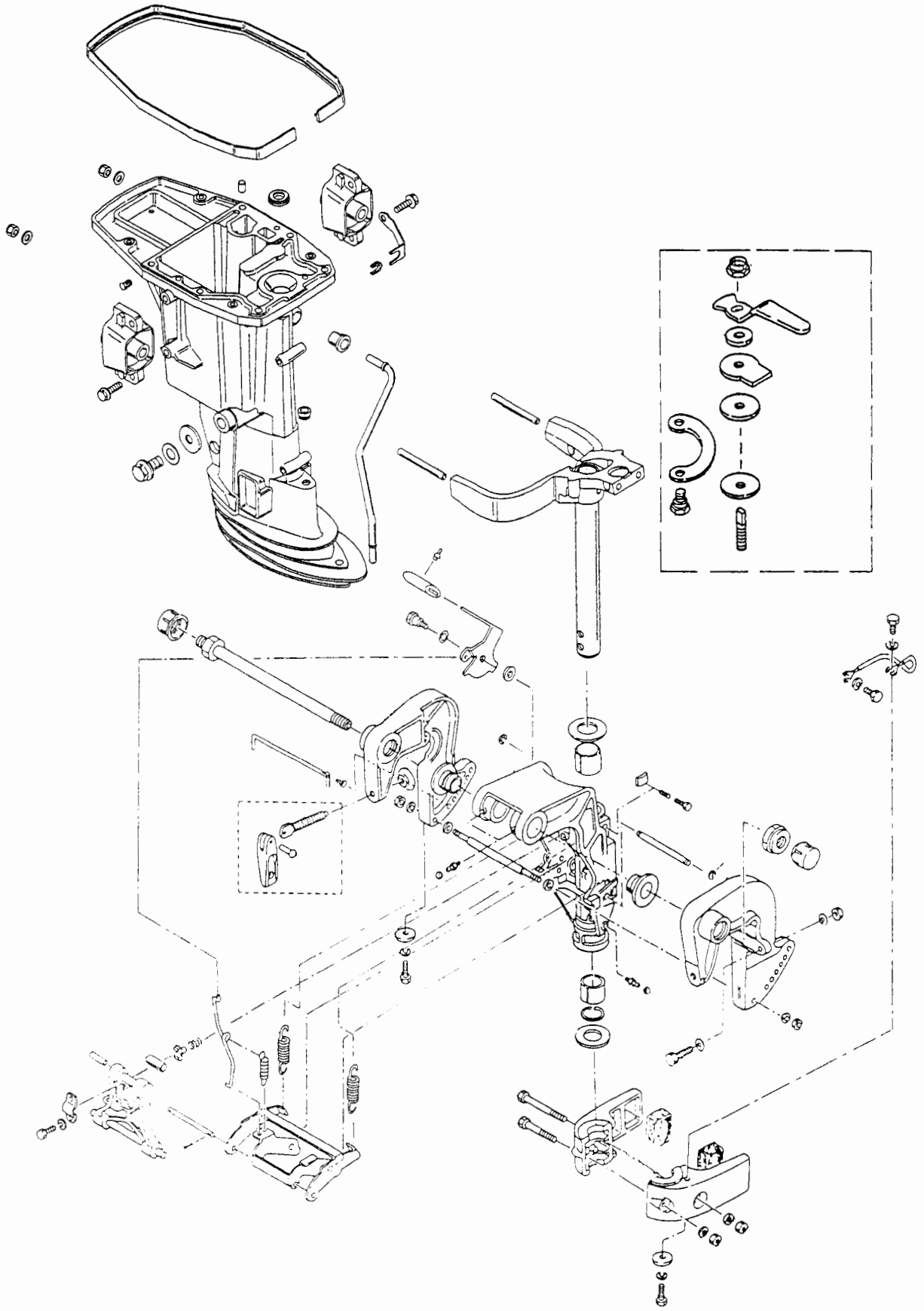

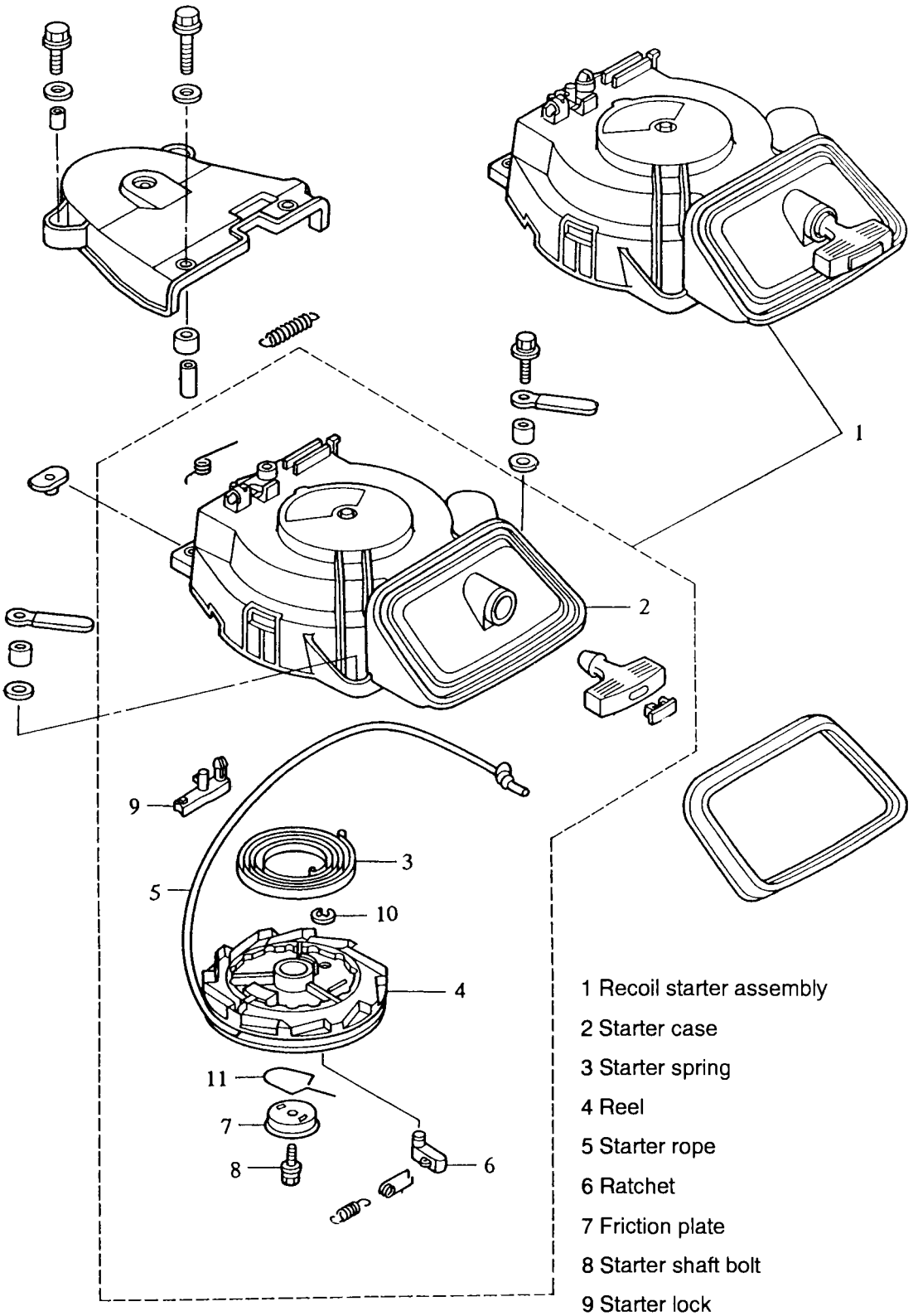

1 Recoil starter assembly
2 Starter case
3 Starter spring
4 Reel
5 Starter rope
6 Ratchet
7 Friction plate
8 Starter shaft bolt
9 Starter lock
10 E-Ring
11 Friction spring

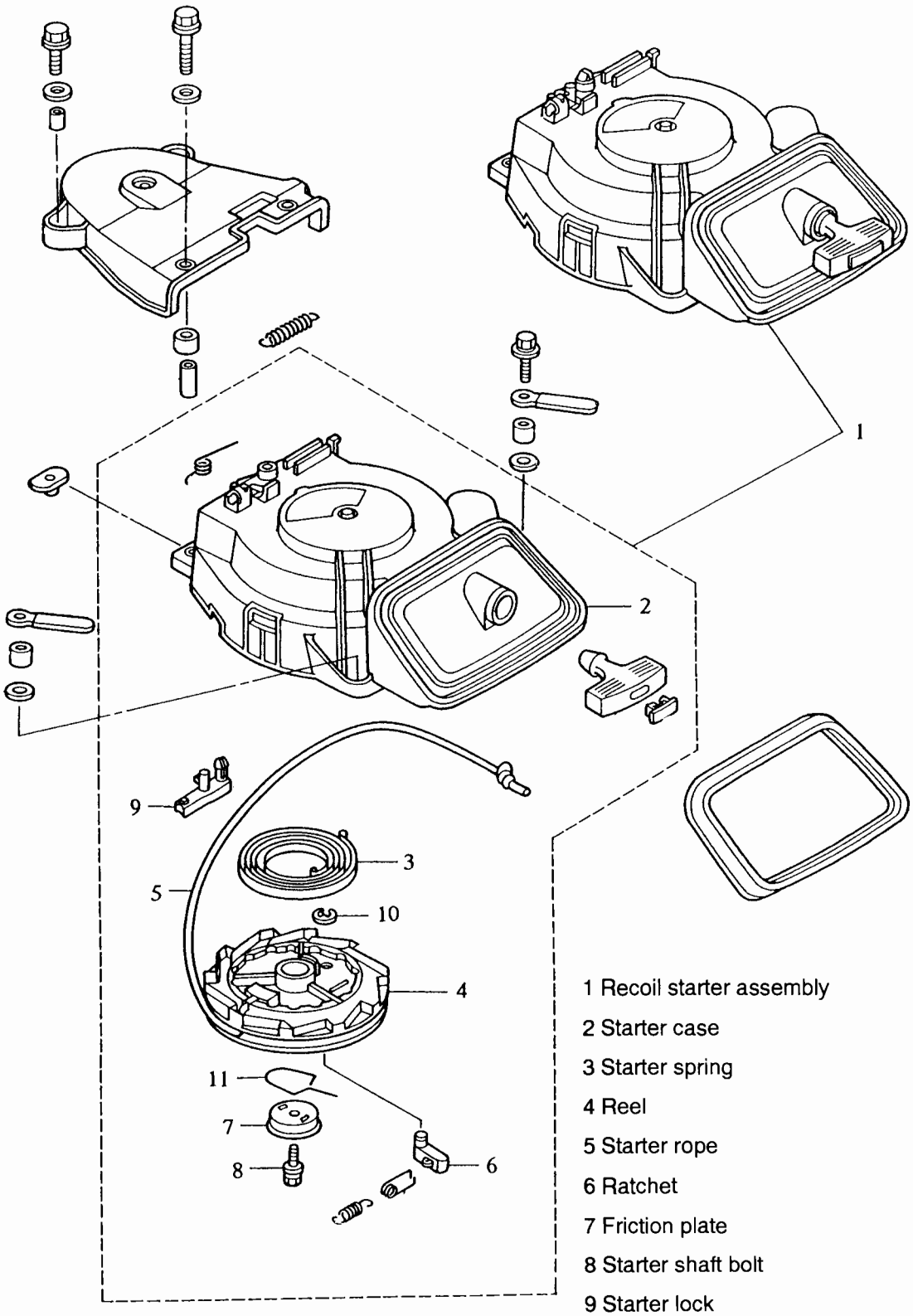

1 Recoil starter assembly
2 Starter case
3 Starter spring
4 Reel
5 Starter rope
6 Ratchet
7 Friction plate
8 Starter shaft bolt
9 Starter lock
10 E-Ring
11 Friction spring

CHAPTER 6 RECOIL STARTER

1. Neutral Interlock Adjustment

1. Place shift lever in neutral position.
2. The slide on the end of the cable should line-up with the neutral start mark on the cover as shown.
3. If adjustment is required, remove the cable and rotate the cable to obtain the correct adjustment.
4. Check the operation of the neutral interlock. The starter rope must not pull out when the shift handle is in forward or reverse position.

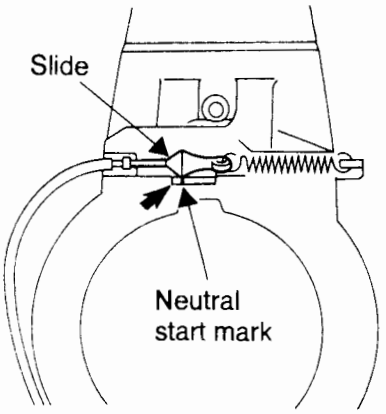

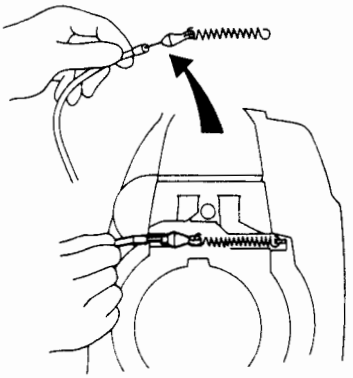

2. Recoil Starter Removal

1. Disengage the neutral interlock cable.
2. Remove bolts and than remove the starter.

⚠ WARNING

Safety glasses should be worn to prevent eye injury caused by the rewind spring uncoiling out of the housing.

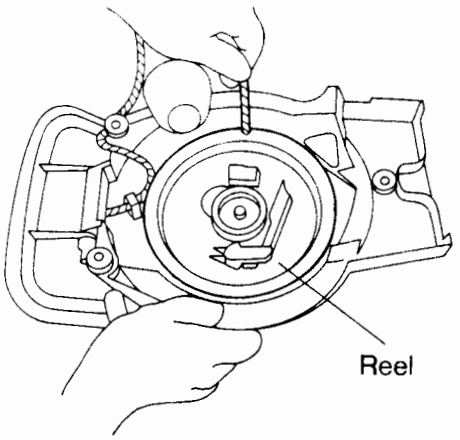

3. Place the looped rope in the cutaway and turn the reel clockwise until rewind spring is fully unwound.

4. Remove the starter shaft bolt, friction plate and spring.
5. Remove the reel.

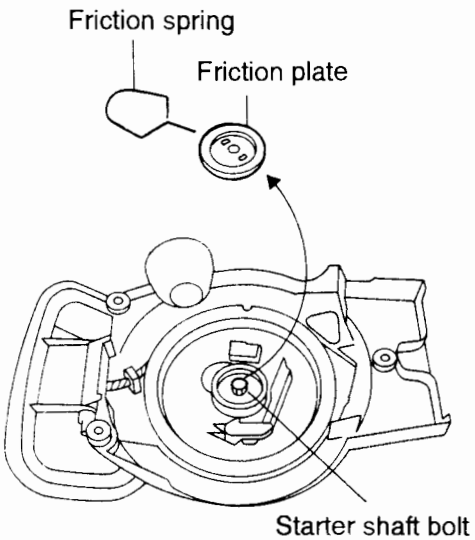

⑥ Remove the E-ring and than remove the ratchet, guide and spring.

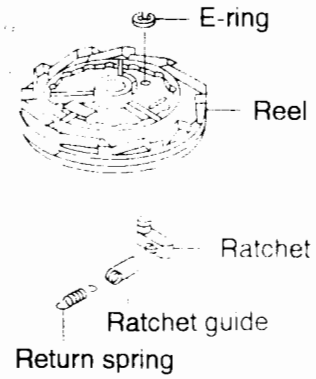

⑦ Remove the starter spring.

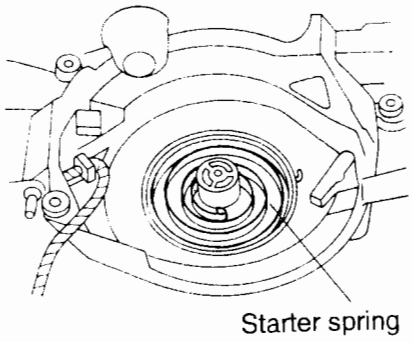

3. Inspection

- Ratchet, starter lock, All springs: Deformation, wear, crack and damage.
- Reel, starter case: Crack and damage
- Starter rope: Wear, fraying and damage

4. Reassenbly

Reassemble the recoil starter in the reverse order of the disassembling with care attention to the following points.

⚠ CAUTION
Wear safety glasses for eye protection in case spring should uncoil out of starter case.

- If the starter spring was removed, place outer hook of the spring in the slot and wind spring counterclockwise into starter case.

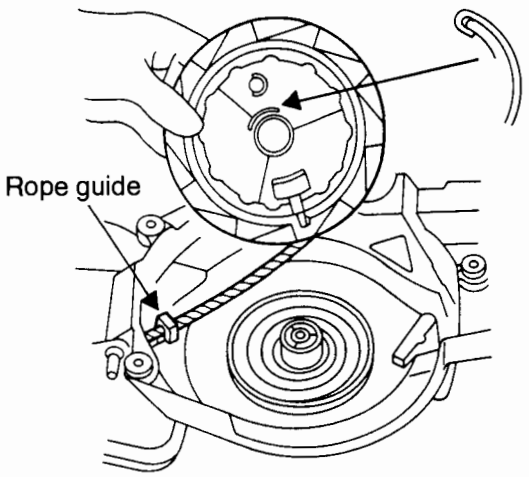

- Insert the starter rope through the rope guide.
- Install the reel. Engage the tab on the back side of the reel into the hook on the starter spring.
- Apply cold-resistant lithium grease to both ends of the starter spring, center hole of reel, retchet, starter lock and friction plate.
- Apply Three Bond 1342 to the thread of the starter shaft bolt.
- Tighten the starter shaft bolt with the specified torque of 5-6 N – m (0.5-0.6 kg – m, 3.6-4.3 lb – ft).
- ADJUSTING STARTER SPRING TENSION:
  Form a loop in the rope. place rope in the cutout and pre-load the spring tension by rotating the drum counterclockwise three turns.

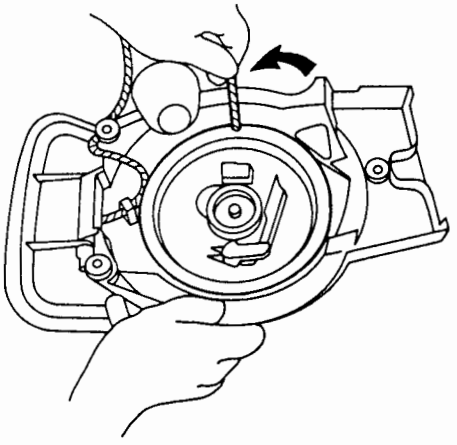

- After re-set the recoil starter to the outboard motor, operate the shifting lever to check to see if the shifting lever is locked at all positions except the neutral position.

1. Carburetor

⚠ CAUTION

Fire and extreme heat are strictly prohibited through disassembly and reassembly of the carburetor.

Cleaning manner: After washing the carburetor with solvent, dry it by air blow.

Pilot screw

Note: Unadjustable because it is fixed.

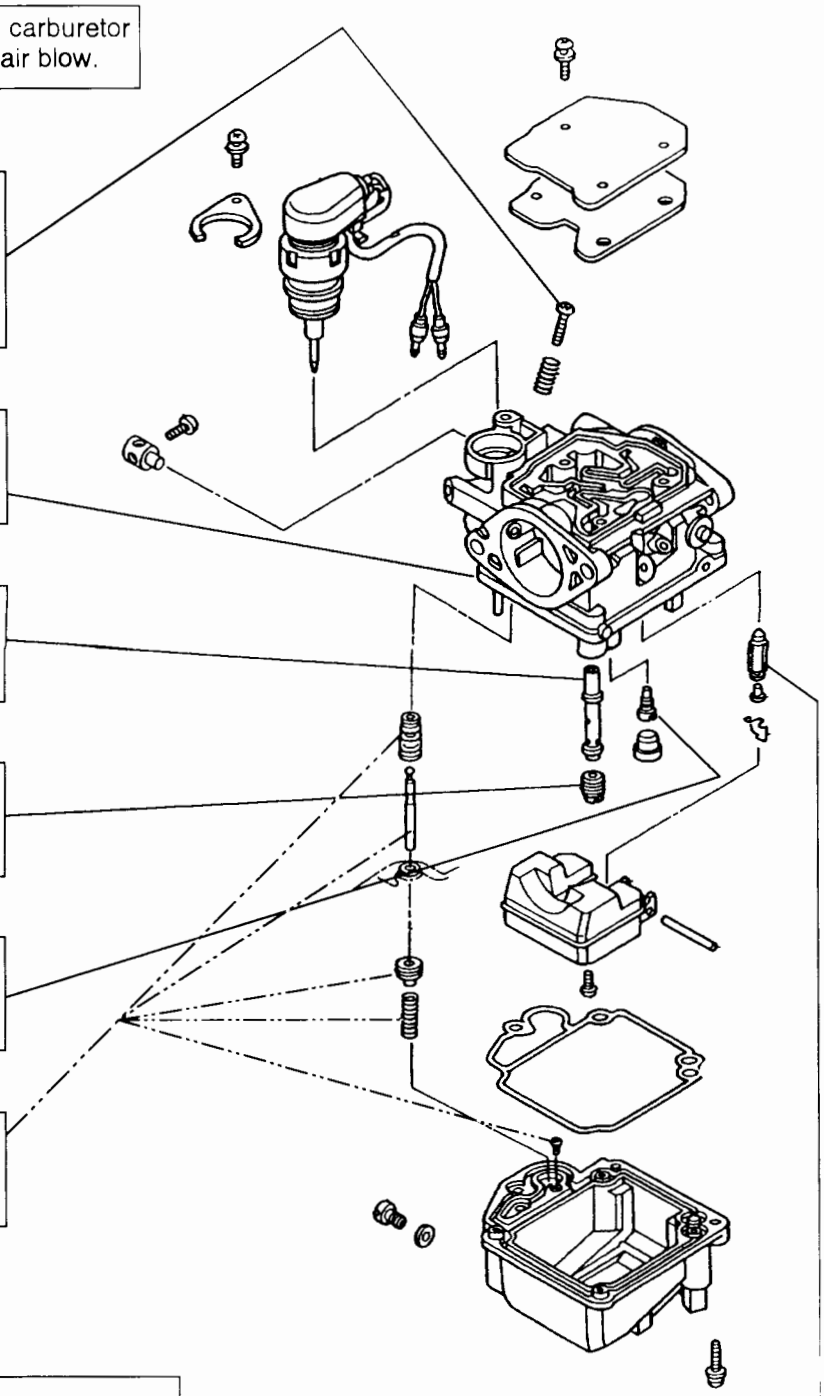

Throttle stop screw

Adjustment:
- Tightening the screw increases engine speed.
- Loosening the screw reduces engine speed.

Carburetor body

Inspection: Clogging the fuel hole for Auto-By-Starter.
Note: Assemble after cleaning.

Main nozzle

Inspection:
- *Check to see if there is any clogging* in the main nozzle.

Main jet

Inspection:
- Check to see if there is any clogging in the jet hole.

Slow jet

Inspection:
- Check to see if there is any clogging in the jet hole.

Accelerator pump parts (for 15A•B)

Inspection:
- Operating condition
- Crack of the rubber boot

Fuel level

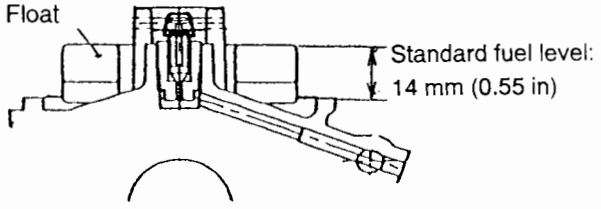

Float valve

Inspection:
- Wear of the float valve in the contact plane to the seat.
- Wear in the float arm that contacts the float valve.

2. Fuel pump

⚠ CAUTION

Fire and extreme heat are strictly prohibited through disassembly and reassembly of the fuel pump.

DISASSEMBLY

Before disassembly, make a aligning line on the out side of fuel pump for correctly reassembling.

① Remove screw, and take off:
- Outer plate
- Gasket
- Valve body

② Turn the piston clockwise or counter clockwise until you look the pin from the cutaway of the pump body.

③ Pull the pin, and remove from the pump body:
- Piston
- Spring
- Diaphragm
- Spring

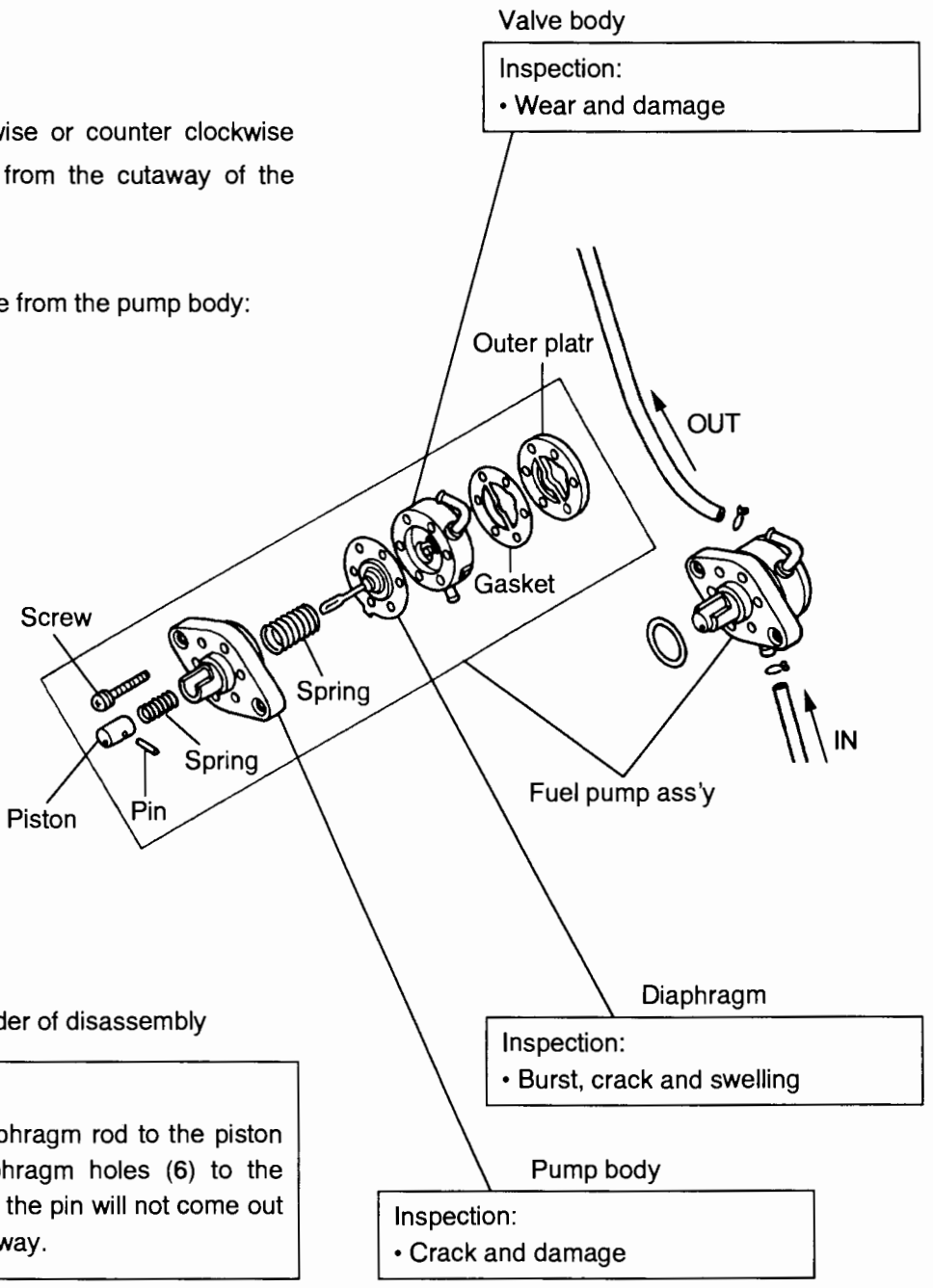

REASSEMBLY

Reassembly is reverse order of disassembly

Note:
After connecting the diaphragm rod to the piston with pin, align the diaphragm holes (6) to the pump body holes so that the pin will not come out through pump body cutaway.

CHAPTER 8 OIL PUMP

Using a micrometor, cylinder gauge, depth gauge and feeler gauge, measure the following oil pump clearances. Replace if worn or out of specification.

① Inner diameter of pump body	29.04 mm (1.143 in) or more
② Clearance between outer rotor and body	0.36 mm (0.014 in) or more
③ Heigth of outer rotor	14.96 mm (0.589 in) or less
④ Clearance between rotor and body side	0.11 mm (0.0043 in) or more (incl. wear of the pump cover)
⑤ Clearance between outer rotor and inner rotor	0.16 mm (0.006 in) or more

1. Component Parts

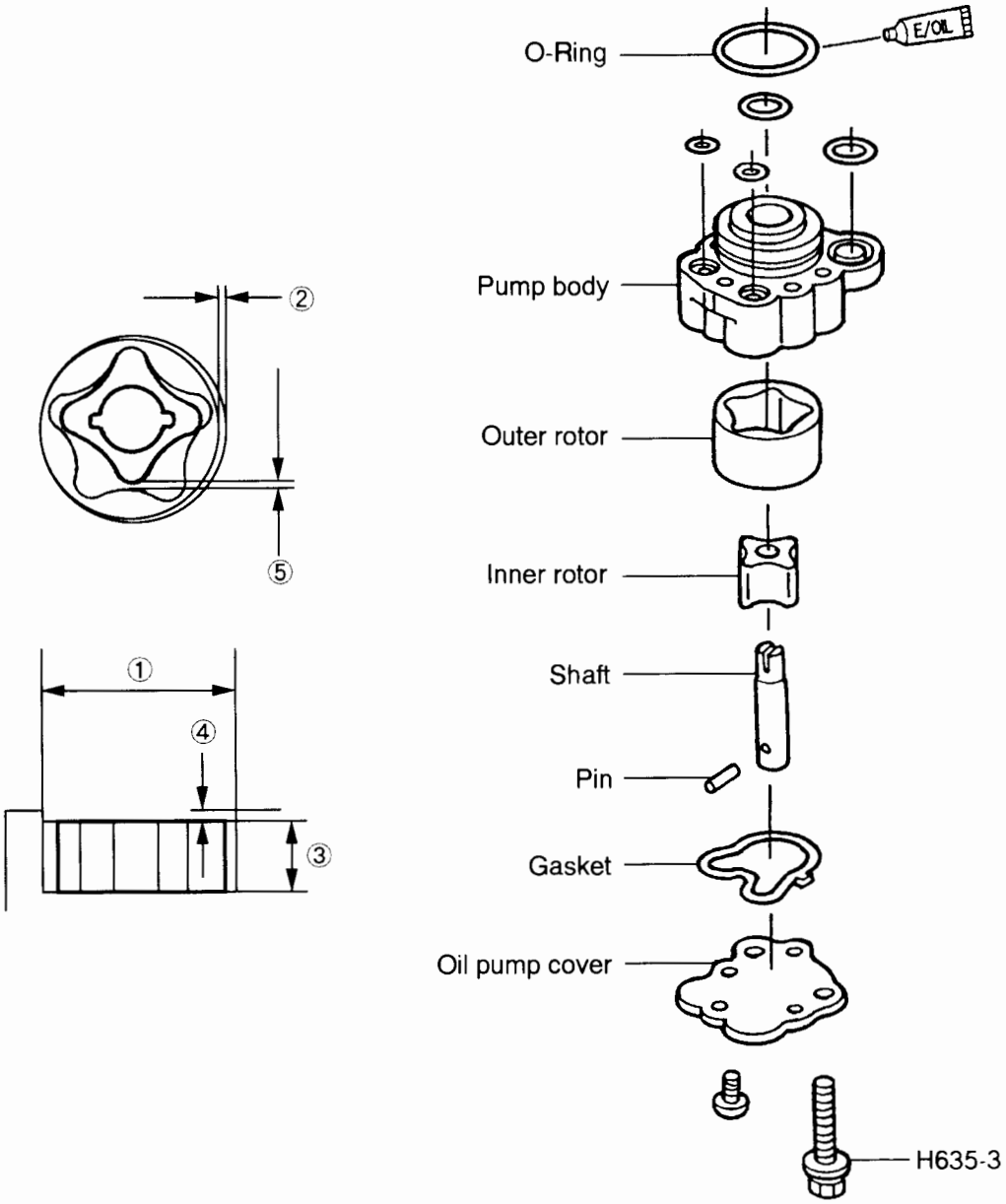

CHAPTER 9 ELECTRICAL SYSTEM

1. Component Parts

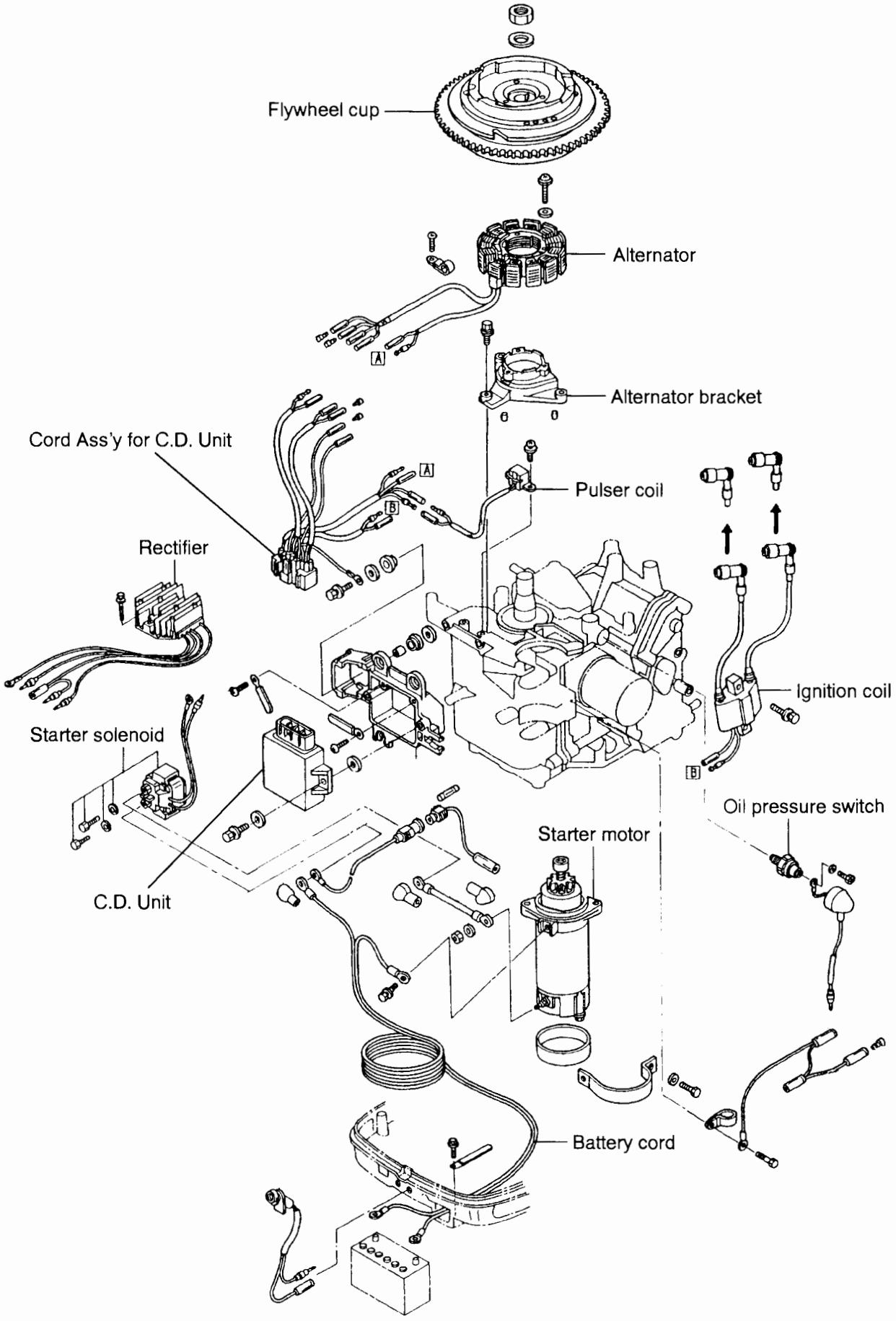

2. Wiring Diagram

MF type

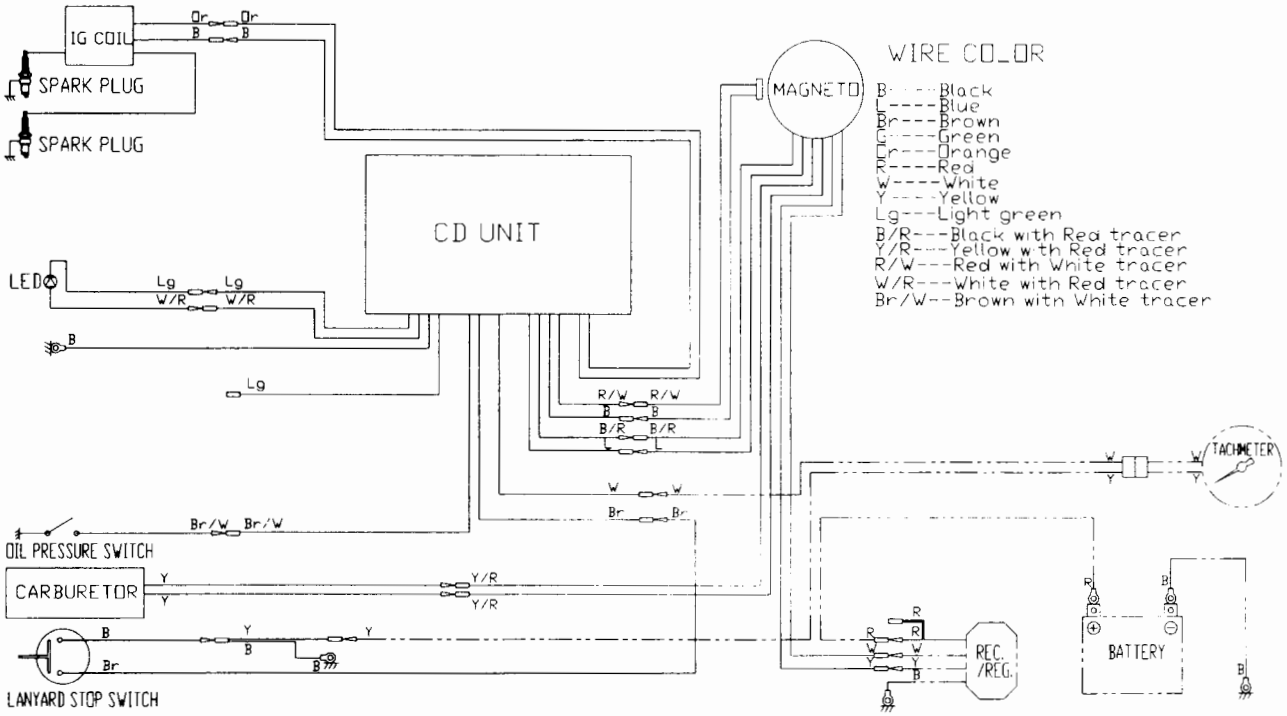

Note: Including optional parts in the diagram.

EF type

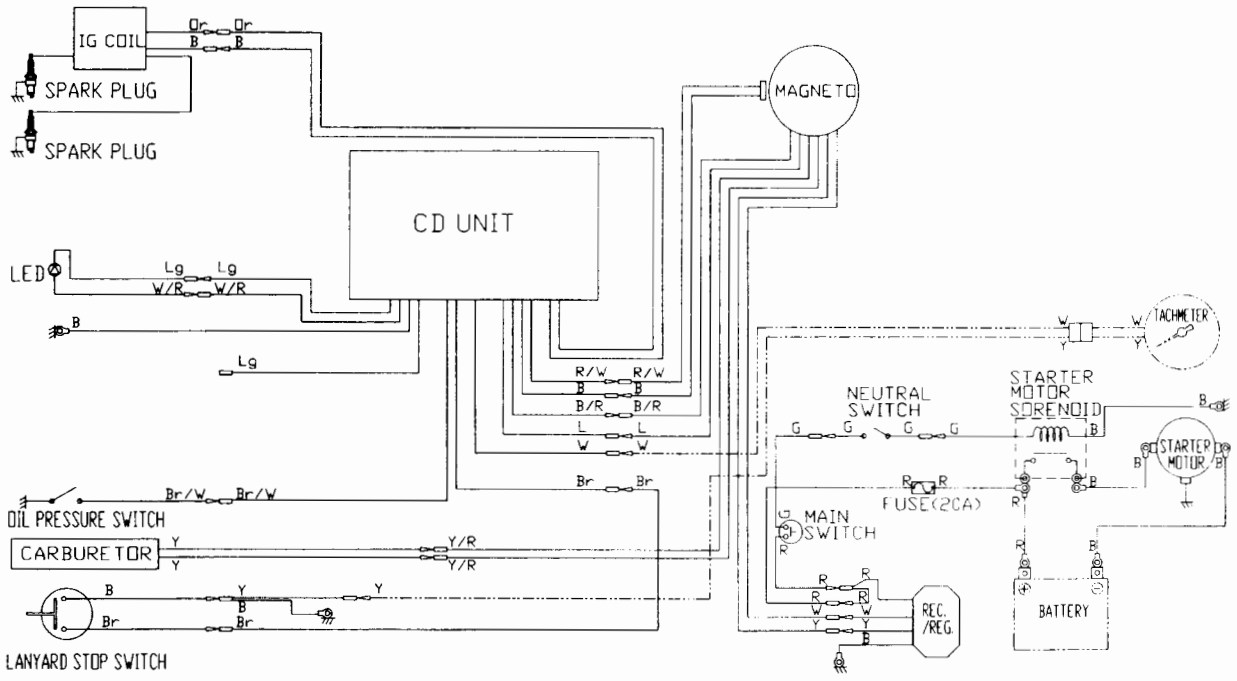

Note: Including optional parts in the diagram.

EP type

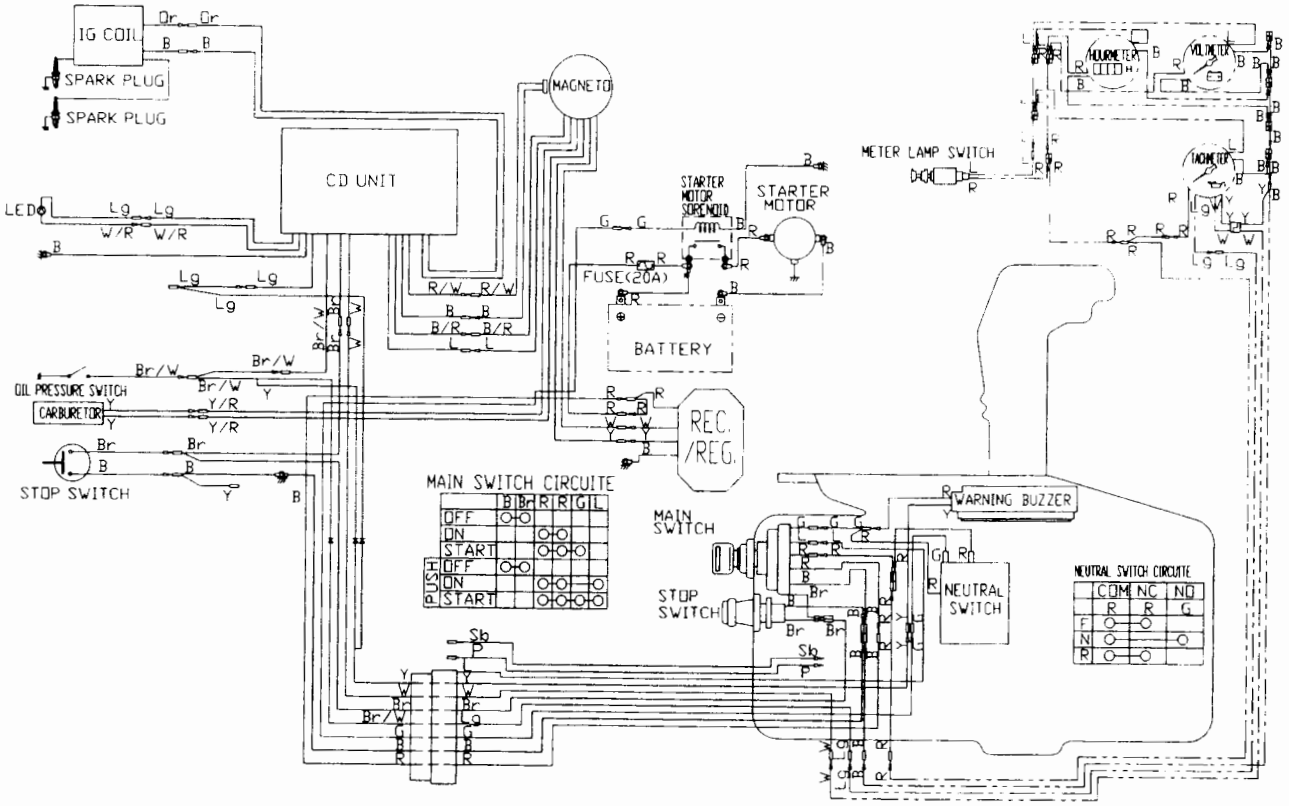

Note: Including optional parts in the diagram.

3. Inspection

1) Flywheel

The flywheel has no need of general inspection, however, pay heed to the following points through servicing the electrical system.

● Since the flywheel magnet is fixed by glue, carefully handle it following the notes appearing below.

Notes:
- ● When mounting/dismounting the flywheel on/from the engine, be careful not to apply any shock to it such as tapping by a hammer.
- ● When dismounting the flywheel from the engine, don't use any general tool available on the market but use the specified tool only.
- ● Be careful not to get the flywheel falling down. If it is dropped, to be changed new one.

2) Resistance for exciter coil, pulser coil, alternator coil and ignition coil

		Normal resistance R (Ω)	Terminals to connect tester
Exciter coil		12.5 – 18.8	Black – Red & Blue
Pulser coil		148 – 222	Red – White & Earth (Black)
Alternator coil		0.27 – 0.41	White – Yellow
Ignition coil	Primary	0.26 – 0.35	Black – Orange
	Secondary	6,800 – 10,200	High tension cord – Core

Note: Since the pulser coil incorporates the magnet inside, pay careful attention to keep it away from iron powder.

3) C. D. unit

- Check to see if there is neither breakdown nor disconnection in the wire harness and terminals.
- Check connections and resistances referring to the following table that shows standard values.

Negative ⊖ terminal of tester \ Positive ⊕ terminal of tester	B 1 IG GND	Or 2 IG (+)	B/R 3 Exciter H	L 4 Exciter L	W 5 Tachometer Signal	W/R 6 LED source	Br 8 Stop SW	B 9 GND		Lg 11 LED	R/W 12 Pulser (+)	B 13 Pulser (−)	Lg 14 Overheat SW	Br/W 15 Oil Pressure SW
1 IG GND		CON (∞)	ON (3.3kΩ)	ON (4kΩ)	ON (6kΩ)	ON (2.6kΩ)	ON (10.5kΩ)	ON (0 Ω)		ON (6.8kΩ)	ON (2.8kΩ)	ON (0 Ω)	ON (8.4kΩ)	ON (8.3kΩ)
2 IG (+)	CON (∞)		CON (∞)	CON (∞)	CON (∞)	CON (∞)	CON (∞)	CON (∞)		CON (∞)	CON (∞)	CON (∞)	CON (∞)	CON (∞)
3 Exciter H	ON (6.8kΩ)	CON (∞)		ON (13kΩ)	ON (16kΩ)	ON (9.5kΩ)	ON (4.1kΩ)	ON (7kΩ)		ON (17kΩ)	ON (9.7kΩ)	ON (6.8kΩ)	ON (17.7kΩ)	ON (17.5kΩ)
4 Exciter L	ON (6.6kΩ)	CON (∞)	ON (13kΩ)		ON (21.5kΩ)	ON (5.5kΩ)	ON (30kΩ)	ON (6.5kΩ)		ON (23kΩ)	ON (10.4kΩ)	ON (6.6kΩ)	ON (23kΩ)	ON (23kΩ)
5 Tachometer Signal	ON (7kΩ)	CON (∞)	ON (14kΩ)	ON (17kΩ)		ON (5.8kΩ)	ON (31.5kΩ)	ON (7kΩ)		ON (24kΩ)	ON (11kΩ)	ON (7kΩ)	ON (24kΩ)	ON (24kΩ)
6 LED source	ON (2.7kΩ)	CON (∞)	ON (6kΩ)	ON (7.5kΩ)	ON (10kΩ)		ON (14.5kΩ)	ON (2.6kΩ)		ON (11kΩ)	ON (5.5kΩ)	ON (2.6kΩ)	ON (12kΩ)	ON (12kΩ)
8 Stop SW	OFF (∞)	OFF (∞)	OFF (∞)	OFF (∞)	OFF (∞)	OFF (∞)		OFF (∞)		OFF (∞)	OFF (∞)	OFF (∞)	OFF (∞)	OFF (∞)
9 GND	ON (0 Ω)	CON (∞)	ON (3.3kΩ)	ON (4kΩ)	ON (6kΩ)	ON (2.6kΩ)	ON (10.5kΩ)			ON (6.8kΩ)	ON (2.8kΩ)	ON (0 Ω)	ON (8.4kΩ)	ON (8.3kΩ)
11 LED	OFF (∞)	OFF (∞)	OFF (∞)	OFF (∞)	OFF (∞)	OFF (∞)	OFF (∞)	OFF (∞)			OFF (∞)	OFF (∞)	OFF (∞)	OFF (∞)
12 Pulser (+)	ON (2.8kΩ)	CON (∞)	ON (6.8kΩ)	ON (7.7kΩ)	ON (10kΩ)	ON (5.5kΩ)	ON (15.5kΩ)	ON (2.8kΩ)		ON (11kΩ)		ON (2.8kΩ)	ON (12kΩ)	ON (12kΩ)
13 Pulser (−)	ON (0 Ω)	CON (∞)	ON (3.3kΩ)	ON (4kΩ)	ON (6kΩ)	ON (2.6kΩ)	ON (10.5kΩ)	ON (0 Ω)		ON (6.8kΩ)	ON (2.8kΩ)		ON (8.4kΩ)	ON (8.3kΩ)
14 Overheat SW	OFF (∞)	OFF (∞)	OFF (∞)	OFF (∞)	OFF (∞)	OFF (∞)	OFF (∞)	OFF (∞)		OFF (∞)	OFF (∞)	OFF (∞)		OFF (∞)
15 Oil Pressure SW	OFF (∞)	OFF (∞)	OFF (∞)	OFF (∞)	OFF (∞)	OFF (∞)	OFF (∞)	OFF (∞)		OFF (∞)	OFF (∞)	OFF (∞)	OFF (∞)	

Notes:

- When measuring the item marked with "CON", shortcircuit the IG (+) wire and the IG GND wire beforehand.
- Since the value marked with "CON" is the capacitor characteristic, it becomes stable with the value shown in parentheses after the tester pointer shakes once.
- The (∞) marked with "CON" indicates a minute value because the tester pointer shakes a little.
- Measuring condition: Tester used: HIOKI 3030, Range: 1 kΩ
- The values shown in the table are just standards, and it is difficult to obtain accurate values.
- Tolerance of resistans: ± 20%

Colour of Cord

B	Black	P	Pink
Br	Brown	R	Red
G	Green	Sb	Sky blue
L	Blue	W	White
Lg	Light green	Y	Yellow
Or	Orange		

Note: (/) means stripe cord colour

4) Rectifier/Regulator

- Check to see if there is neither breakdown nor disconnection in the wire harness and terminals.
- Check connections and resistances referring to the following table that shows standard values.
- Disconnect all wires.

Negative ⊖ terminal of tester	Positive ⊕ terminal of tester			
	White	Yellow	Red	Black
White		OFF	ON (9kΩ) 「5kΩ」	OFF
Yellow	OFF		ON (9kΩ) 「5kΩ」	OFF
Red	OFF	OFF		OFF
Black	ON (8.5kΩ) 「5kΩ」	ON (8.5kΩ) 「5kΩ」	ON (10kΩ) 「5.5kΩ」	

Notes:

- Measuring condition: Tester used — Sanwa Multitester SP-15D, Renge 1kΩ→( )
  — Hioki 3030, Range 1kΩ → 「 」
- Tolerance of resistans: ± 20%
- The values shown in the table are just standards, and it is difficult to obtain accurate values.

5) Manner to check ignition timing

The magneto employs the electric ignition advance system that advances ignition timing with increase of engine speed.

While running the engine, check ignition timing with the timing light.

There are nine (9) markings (TDC, ATDC 5° and BTDC 5°, 10°, 15°, 20°, 25°, 30°, 35°) on the flywheel cup.

Check the ignition timing while observing the position of the carved marking on the starter case.

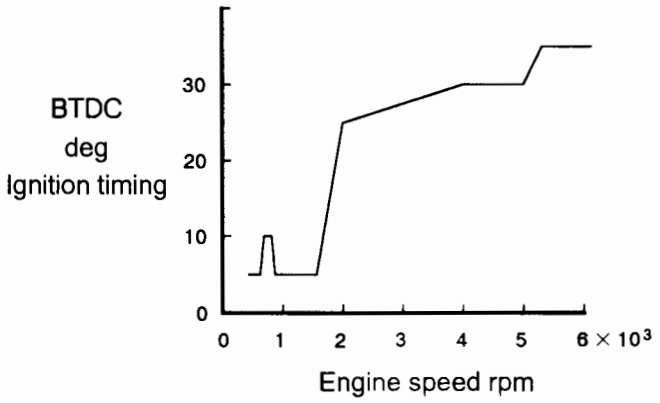

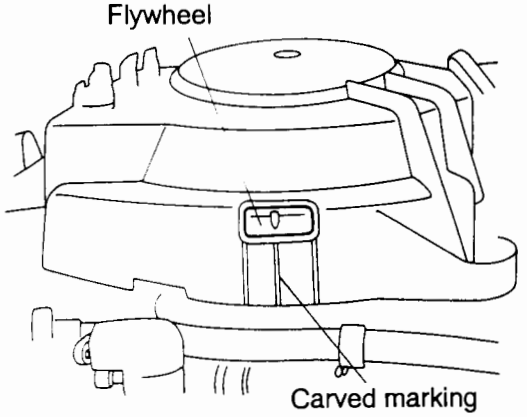

CHAPTER 10 TEST RUN AND INSPECTION AFTER COMPLETE ASSEMBLY

1. Test Run Tank and Test Propeller

● Requirements for the test run tank

① Partition (in case of a test run tank for two machines)
② Ventilation duct
③ Water level
④ Transom board

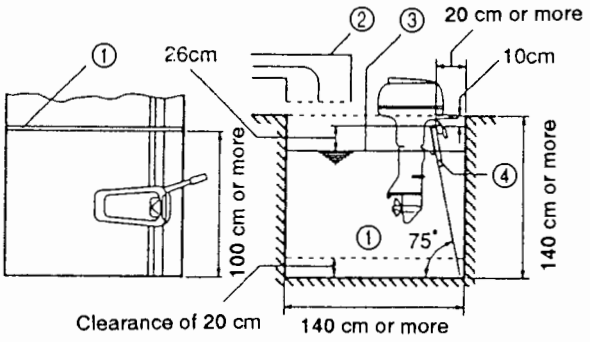

- The test run tank must have the measurements specified in the figure at least.
- If two outboard motors are set in the test run tank for two or more motors, the minimum measurements required for a motor must be secured by a fixed partition.

● Test propeller

Outer diameter: 180 mm
Breadth: 16 mm

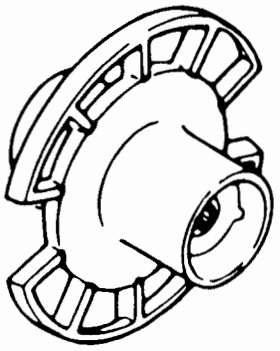

Model	Engine speed at full throttle r/m
9.9	Approx. 4,500
15	Approx. 5,400

● Notes on test run tank

- If test run is continuously performed in the same tank, always pay heed to the water temperature not to raise it to 25 ℃ or more, because continuous operation raises the water temperature and high water temperature may cause engine seizure. If possible, use a water cooling equipment to keep the water temperature constant or continuously add fresh water to the tank to lower the water temperature.
- If the same water is used for tests many times, the water not only is soiled but may cause poor cooling of the engine because waste matters accumulating in the water stick to the cooling surface of the engine. Keep the water fresh for every test without fail.
- If the engine continues running for a considerably long time, exhaust gas collects around the outboard motor and the carburetor supplies mixture containing the exhaust gas. If worst comes to worst, such exhaust gas may cause engine failure. Therefore, it is important to discharge exhaust gas forcibly out of the test run tank and keep the tank and its surroundings well – ventilated.
- Since the water in the tank frequently splashes, keep the water level high as shown in the figure.

2. Inspection

● Items to be checked before test run

- Condition of the fuel pipe line
- Operation of the shifting lever
- Electric wiring, connection and wire clamp condition
- Operation of reverse lock and its locking condition

CHAPTER 10 TEST RUN AND INSPECTION AFTER COMPLETE ASSEMBLY

● Items to be checked during test run

While idling the engine, check the following items.

- Fuel leak from parts joined spots of the engine.
- Cooling water leak from parts joined spots of the engine.
- Extraordinary noise
- Idle speed and stable idling
- Operation of the stop switch
- On/off operation of the engine oil warning lamp

  Off: The lamp goes out as the engine starts.

  On: The lamp goes on when the lead wire of the oil pressure switch is grounded to the body.
- Operation of the clutch
- Engine speed at acceleration and deceleration
- Cooling water discharge condition (Cooling water must vigorously be discharged from the water inspection hole.)

● Additional tightening after test run

Check the tightening condition of respective bolts and nuts after test run, and additionally tighten them with the specified tightening torque.

● Break-in

When any of the piston, piston ring, piston pin, crank shaft, connecting rod, cylinder, inlet/exhaust valve, etc. is replaced, perform a break-in of the engine for fitting the sliding surfaces.

Note: Perform a break-in of the engine according to the following standards.

Break-in period • • • • • • 10 hours

Minutes and hours	0	10 minutes	2 hours	3 hours	10 hours
Break-in manner	Trolling or idling	Half or less throttle opening, 3,000 rpm approx.	Three-quarter or less throttle opening, 4,000 rpm approx.	Three-quarter throttle opening, 4,000 rpm approx.	Normal running

▽ Navigation at the lowest speed

▽ Full throttle running for about 1 minute at 10 – minutes intervals

▽ Full throttle running for a short time

TOHATSU CORPORATION

Address: 5-4, 3-chome, Azusawa, Itabashi-ku, TOKYO 174-0051, Japan
Facsimile: (03) 3966-2951
Phone: (03) 3966-3117

No. 003-21041-0
00-08-MH2800
Printed in Japan